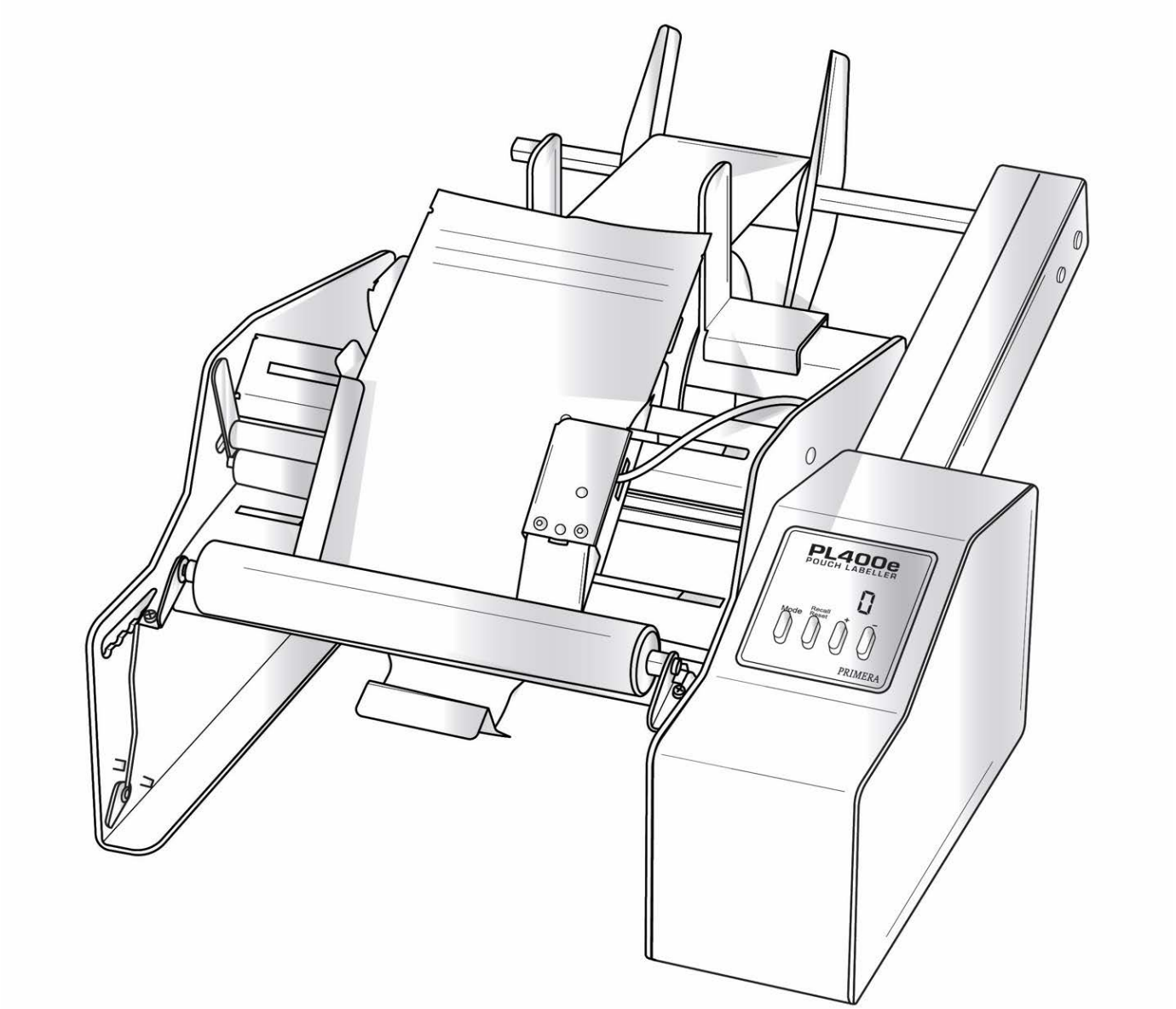

PL400e
POUCH LABELLER

User's Manual

For the most recent version of this manual please visit
https://dtm-print.eu/manuals/

102424

Notices: The information in this document is subject to change without notice. NO WARRANTY OF ANY KIND IS MADE WITH REGARD TO THIS MATERIAL, INCLUDING, BUT NOT LIMITED TO, THE IMPLIED WARRANTIES OF MERCHANTABILITY AND FITNESS FOR A PARTICULAR PURPOSE. No liability is assumed for errors contained herein or for incidental or consequential damages in connection with the furnishing, performance, or use of this material.

Trademark Acknowledgments: Primera and Primera Eddie are registered trademarks of Primera Technology, Inc. Windows is a registered trademark of Microsoft Corporation. All other trademarks are the property of their respective owners.

Revision History

FCC Compliance Statement: This device complies with part 15 of the FCC rules. Operation is subject to the following two conditions: (1) this device may not cause harmful interference, and (2) this device must accept any interference received, including interference that may cause undesired operation.

For Users in the United States: This product is intended to be supplied by a UL listed Direct Plug-In Power Supply marked "Class 2" or a UL listed ITE Power Supply marked "LPS" with output rated 12VDC, 3A or higher. This equipment has been tested and found to comply with the limits for a Class A digital device, pursuant to Part 15 of the FCC Rules. In a domestic environment, this product may cause radio interference, in which case the user may be required to take adequate measures. This equipment generates, uses, and can radiate radio frequency energy and, if not installed and used in accordance with the instructions, may cause harmful interference to radio communications. However, there is no guarantee that interference will not occur in a particular installation. If this equipment does cause harmful interference to radio or television reception, which can be determined by turning the equipment off and on, the user is encouraged to try to correct the interference by one or more of the following measures:

- Re-orient or relocate the receiving antenna.
- Increase the separation between the equipment and receiver.
- Connect the equipment into an outlet on a circuit different from that to which the receiver is connected.
- Consult the dealer or an experienced radio/TV technician for help.

Use of shielded cables is required to comply with the Class A limits of Part 15 of the FCC Rules. You are cautioned that any changes or modifications not expressly approved in this manual could void your authority to operate and/or obtain warranty service for this equipment.

For Users in Canada: This digital apparatus does not exceed the Class A limits for radio noise for digital apparatus set out on the Radio Interference Regulations of the Canadian Department of Communications. Le present appareil numerique n'emet pas de bruits radioelectriques depassant les limites applicables aux appareils numeriques de la class A prescrites dans le Reglement sur le brouillage radioelectrique edicte par le ministere des Communications du Canada.

! WARNING !
TO PREVENT FIRE OR SHOCK HAZARDS, DO NOT EXPOSE THE UNIT TO RAIN OR MOISTURE. TO REDUCE THE RISK OF ELECTRIC SHOCK, DO NOT REMOVE EXTERIOR PANELS. NO USER-SERVICEABLE PARTS INSIDE. REFER SERVICING TO QUALIFIED SERVICE PERSONNEL. OPERATE THE UNIT WITH ONLY THE PROPER ELECTRICAL SPECIFICATIONS AS LABELED ON THE PRINTER AND AC ADAPTER.

! WARNING!
DO NOT WEAR LOOSE-FITTING CLOTHING SUCH AS NECK TIES OR LOOSE LONG SLEEVES WHEN OPERATING THE PL400e. THE MOTOR IS VERY POWERFUL AND THE LINER DRIVE ROLLER COULD CATCH THE CLOTHING WHILE THE LABELS ARE BEING APPLIED.

Table of Contents

Section 1: Unpacking and Setup

Thank you for purchasing the PL400e Pouch Labeler (hereafter referred to as "labeller").

Please note the parts of the labeller which will be referenced at multiple points in the manual that follows.

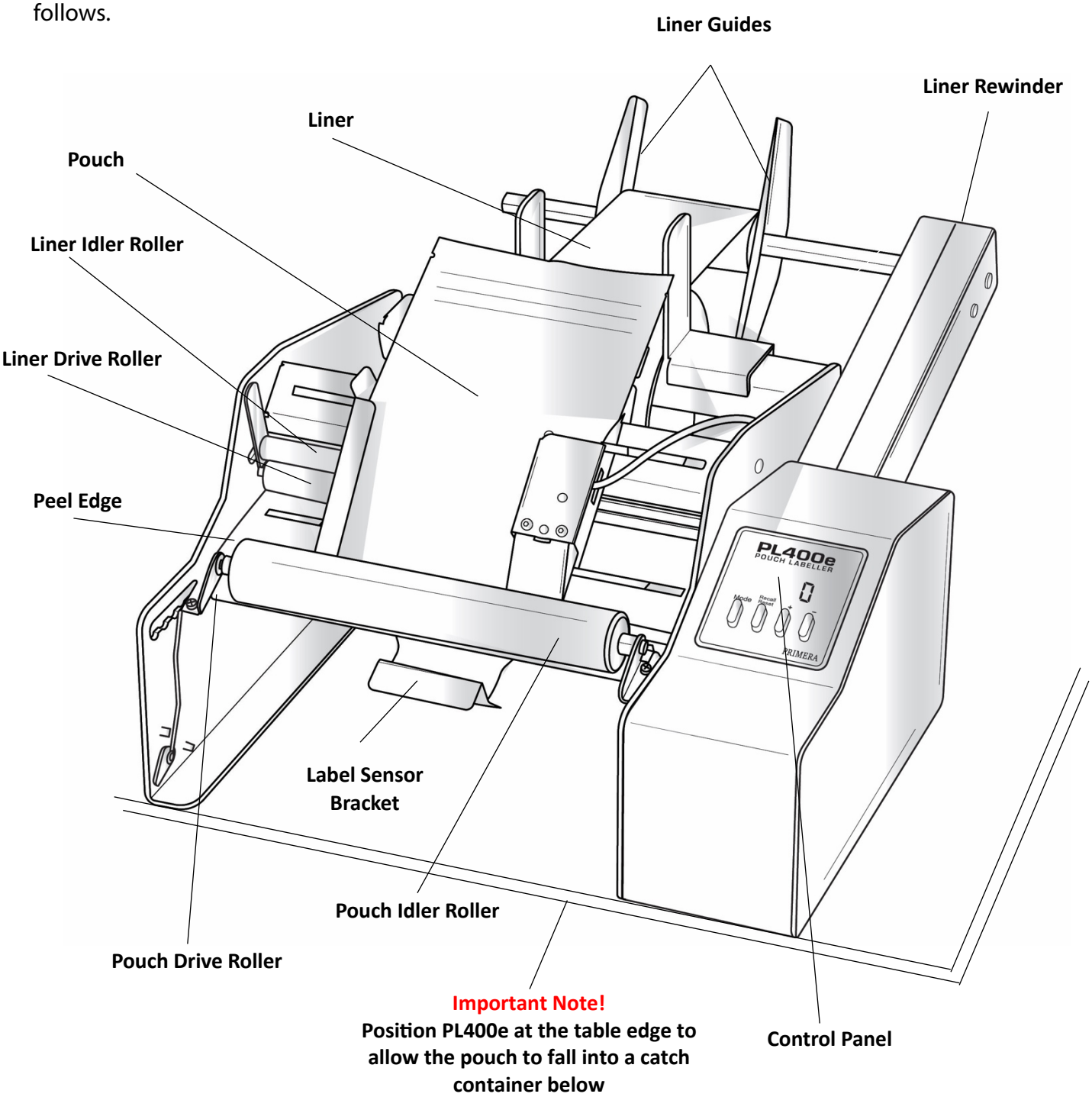

Roll Guides

Roll Bar

Power Switch

Power Input (12V)

Roll Drag Arm

Rewinder Arm Torque Adjustment Nut

Liner Rewinder

Liner Guides

Power Adapter

Hex Key (for linder guide adjustment)

Wrench (for rewinder arm torque adjustment)

Section 2: Assemble the Liner Rewinder

The rewinder portion of the labeller requires minor assembly. No tools are required. Follow these instructions.

1. Locate the rewinder arm, liner guides, and two thumbscrews.

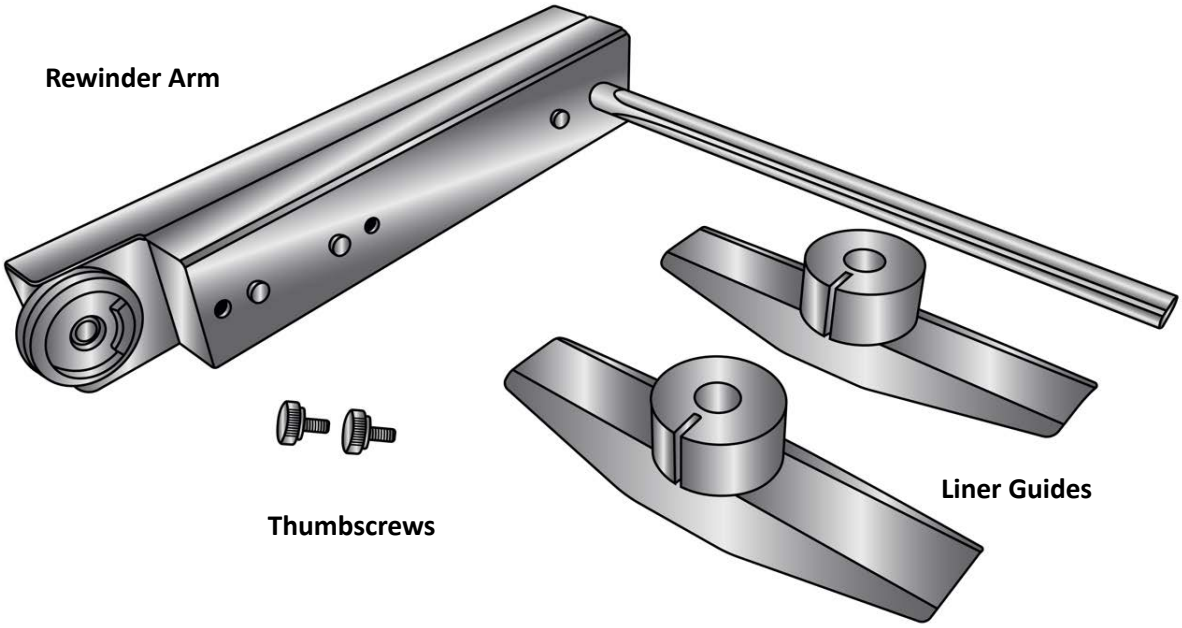

2. Find the opening for the rewinder arm on the back of the labeller above the power switch.

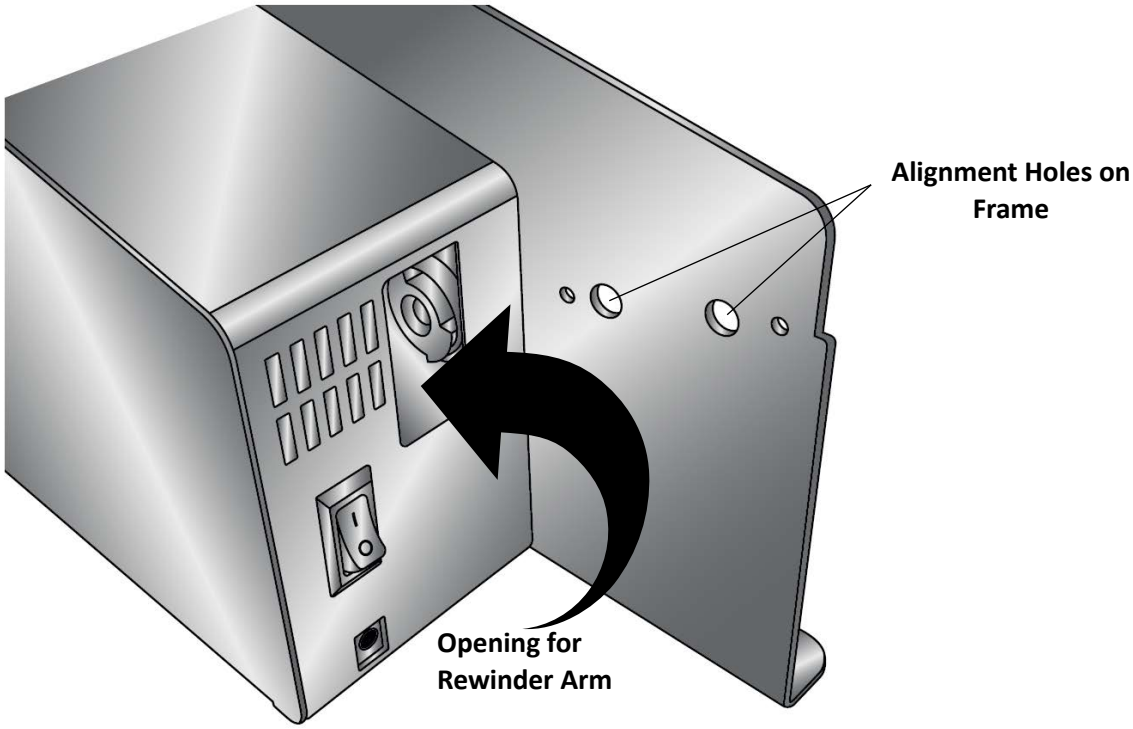

3. Insert the rewinder arm into the opening as shown.

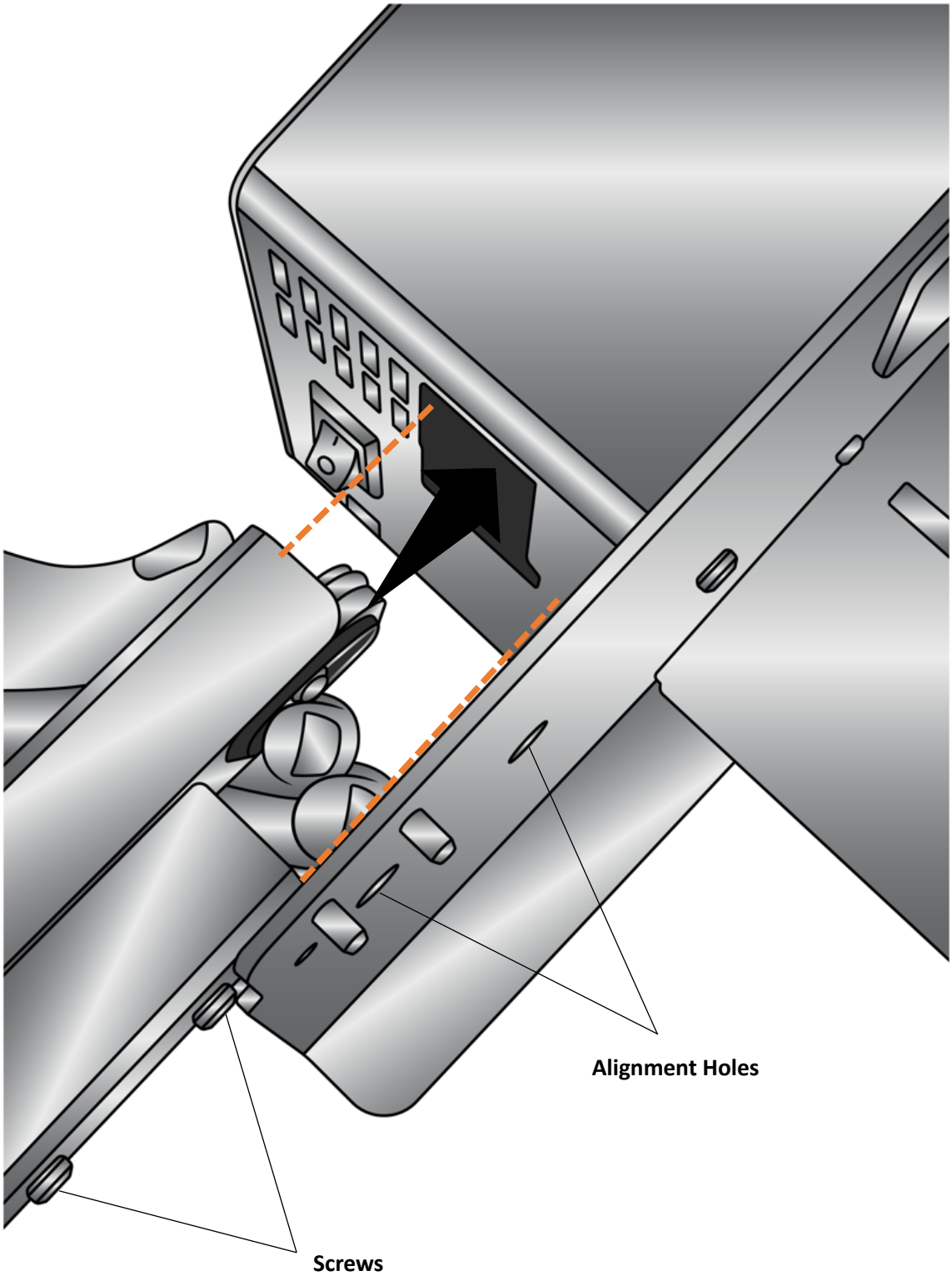

4. Align the screws on the side of the arm with the holes in the labeller frame.

5. Insert the thumbscrews into the threaded holes. Hand tighten the thumbscrews.

6. If not already attached to the rewinder arm, the liner guides must be installed on the rewinder. Locate the liner guides. Slide one of the label guides onto the shaft with the black cylinder facing you. Note that the holes in the cylinder must align with the flats on the shaft.

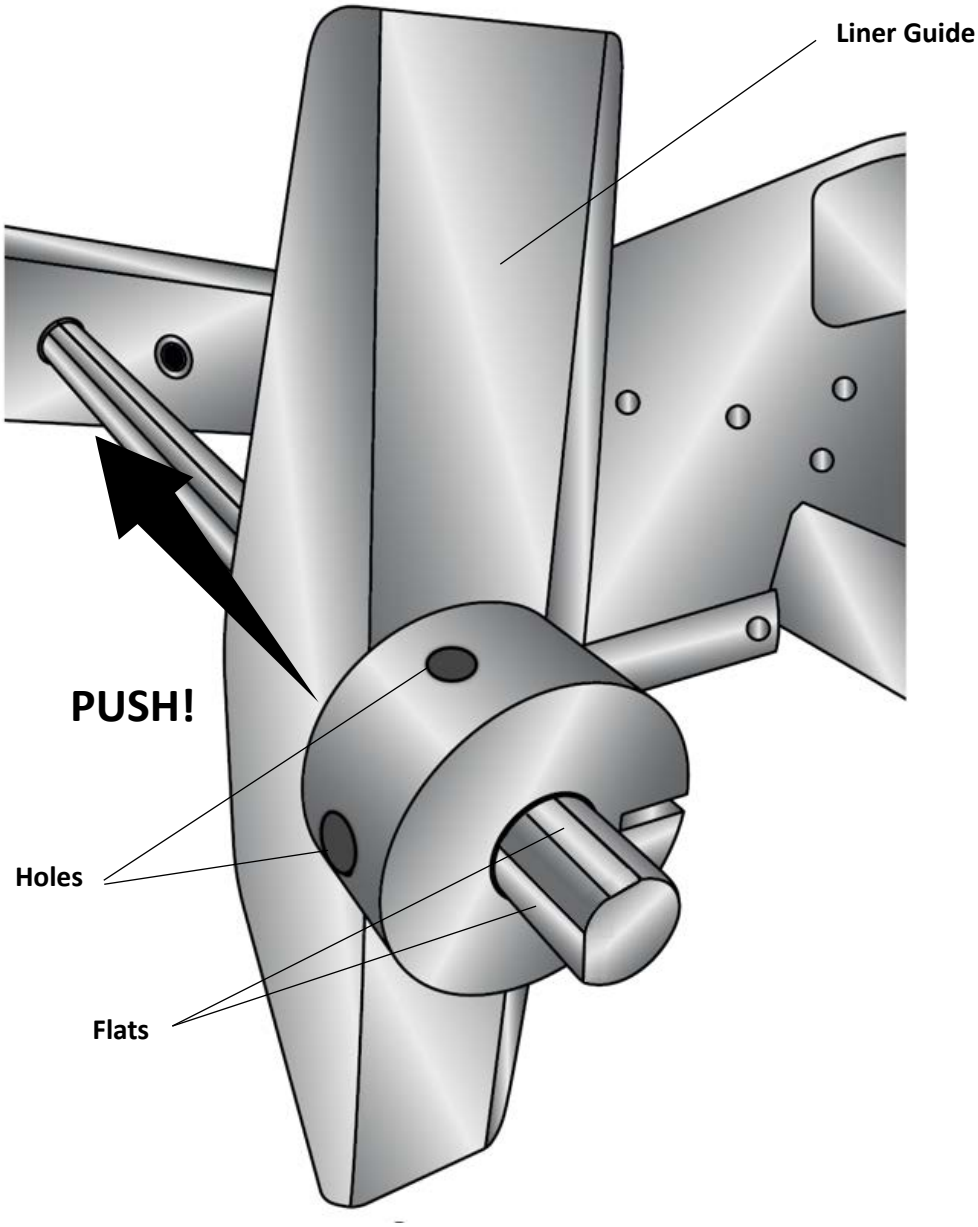

7. Push the remaining liner guide onto the shaft with the black cylinder facing away from you. The guides should be calibrated from the factory to stay in place during Label application, but allow adjustment of their position without the use of tools. If more or less sliding force is desired, the set screws in the black cylinders can be tightened or loosened with a 2mm hex key provided. The two set screws in each cylinder should be tightened equally.

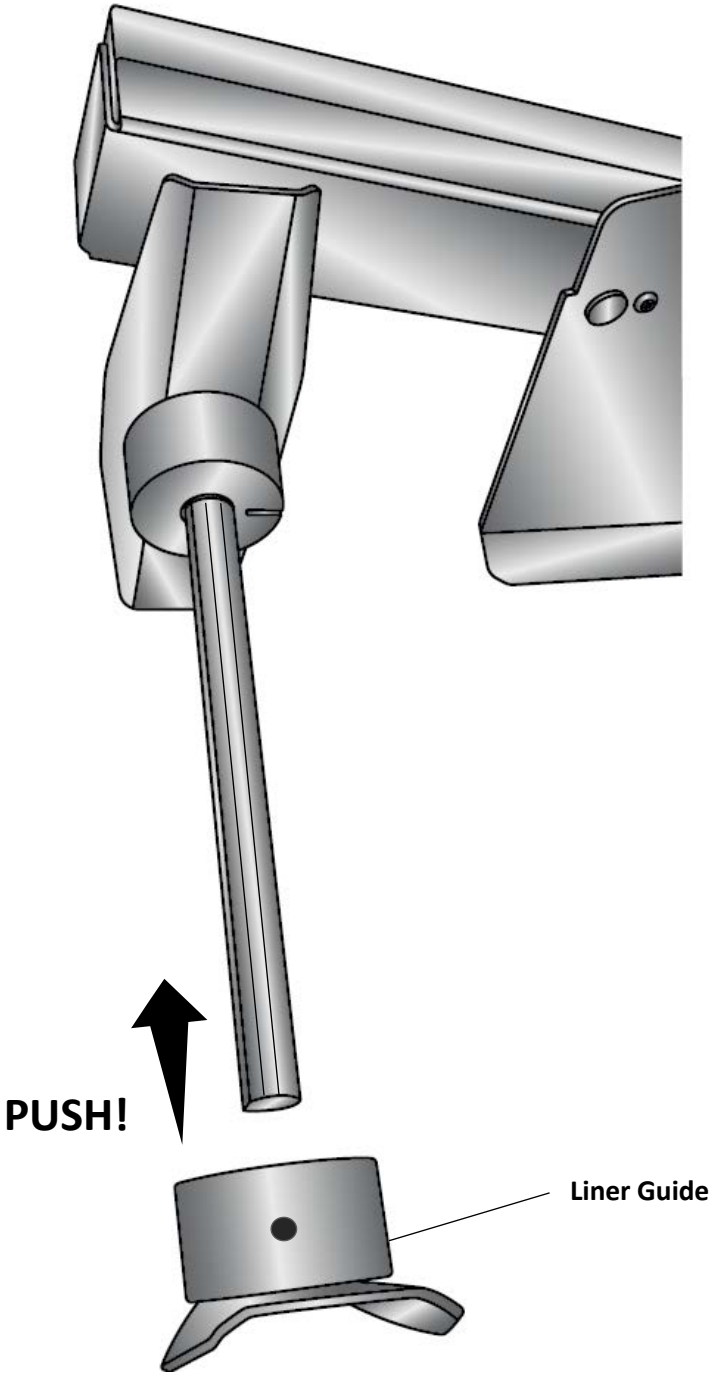

Section 3: Loading the Label Stock

1. Remove the roll bar and roll guides from the labeller. The roll guides and roll drag arm are removable and adjustable. They are held in place magnetically.

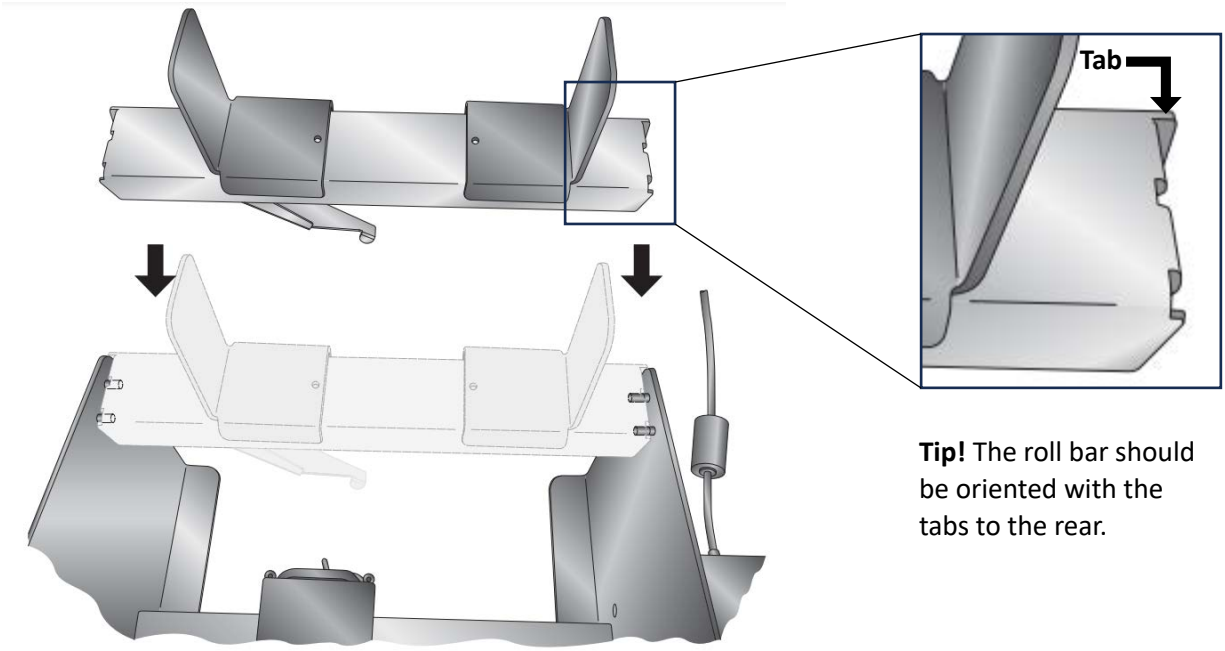

Tip! The roll bar should be oriented with the tabs to the rear.

2. Remove one roll guide and the roll drag arm from the roll bar.

3. Place the label stock roll on the roll bar with one side against the upright of the remaining roll guide. Place it on the roll bar with the loose end of the stock feeding underneath the roll.

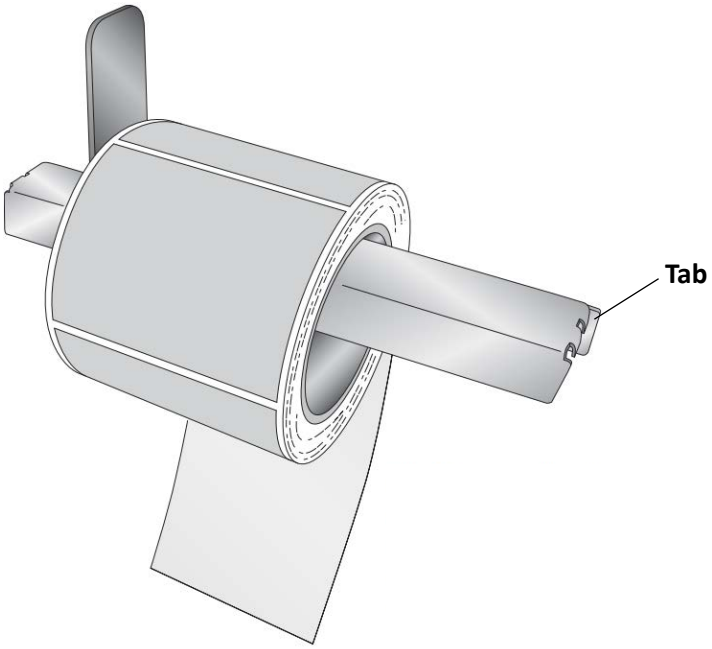

Tip! For narrower label roll cores (less than 92 mm (3.625”)) you may need to reverse the roll guides so that the bottom of the guides are facing out to allow the uprights to be placed next to the roll.

The roll guides can slide along the bar to accommodate any size roll.

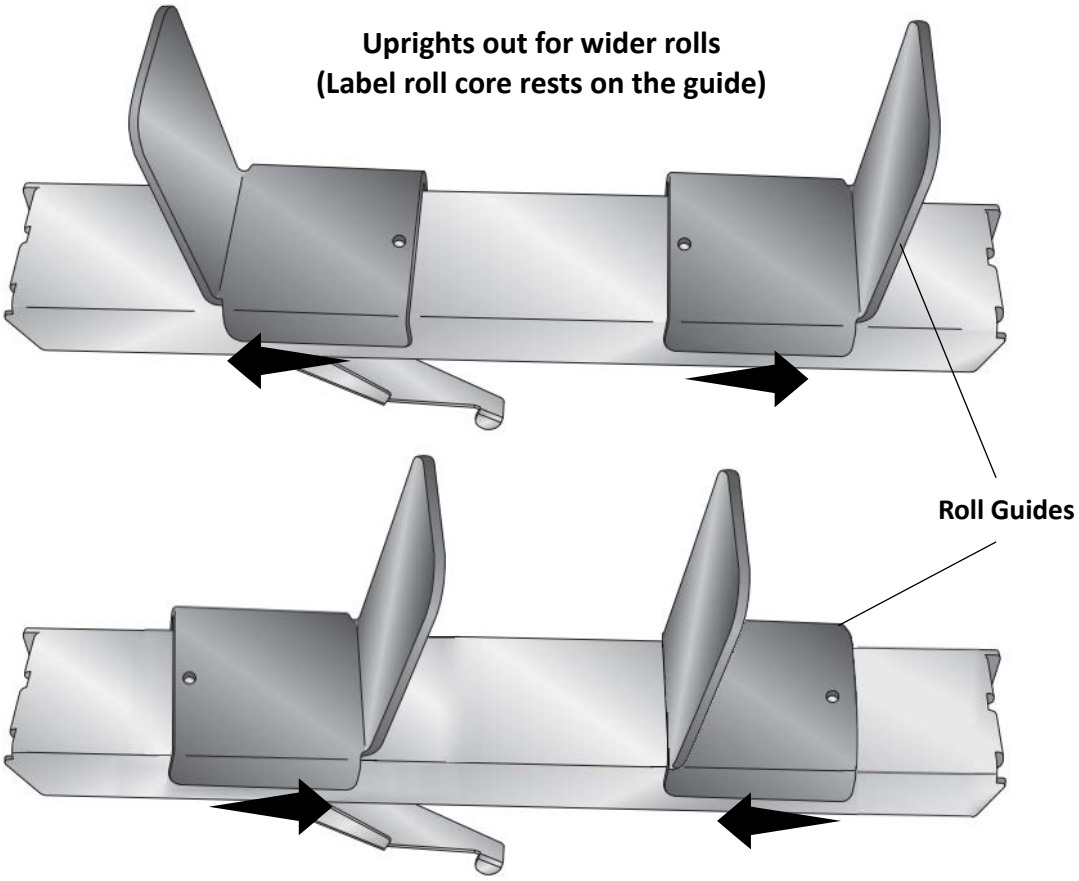

4. Place the roll drag arm under the roll bar. The roll drag arm may be placed on either side of the roll bar but the rounded tip of the roll drag arm should be located inside the core approximately in the center. The arm is spring loaded so that there is downward pressure on the inside of the roll. This helps prevent application alignment problems near the end of a label stock roll.

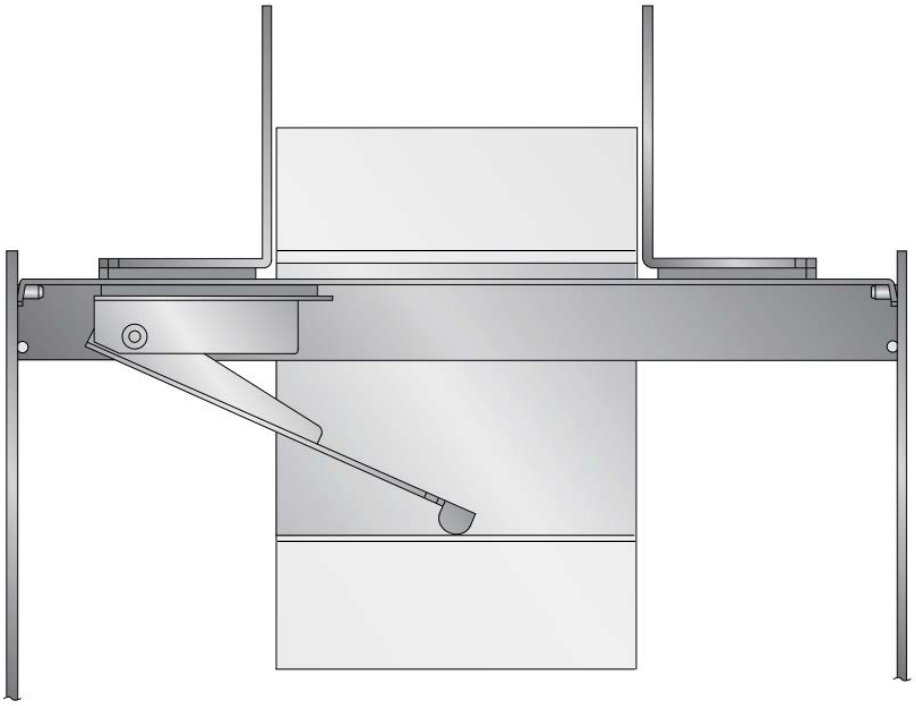

5. Place the removed roll guide back on the roll bar and slide it close to, but not touching, the label stock roll.

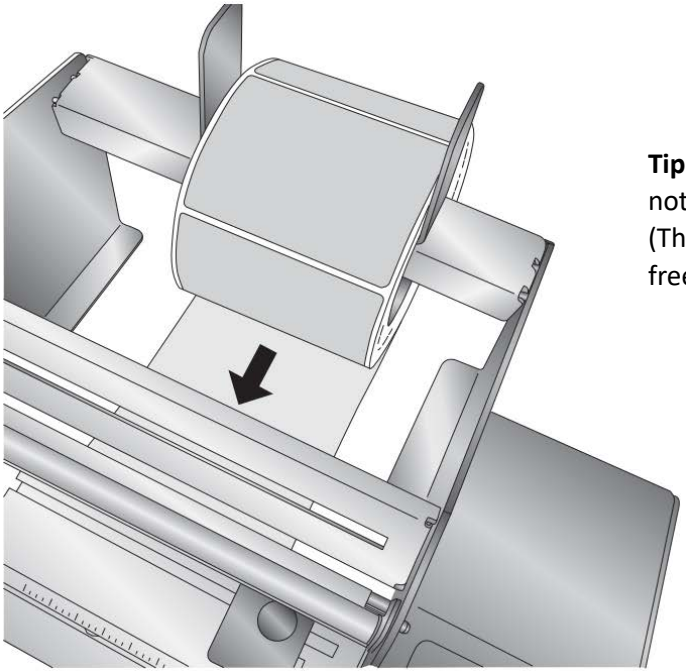

Tip! Roll guide uprights must not pinch the label stock roll. (The label stock roll must have free play between guides.)

6. Position the stock to correspond with the general area where it will be applied to the pouch.

7. Pull the loose end of the label stock forward and then push it into the feed area from the back of the labeller. Move the label guides to the sides for now. These will be adjusted later. The labels will come out underneath the peel edge.

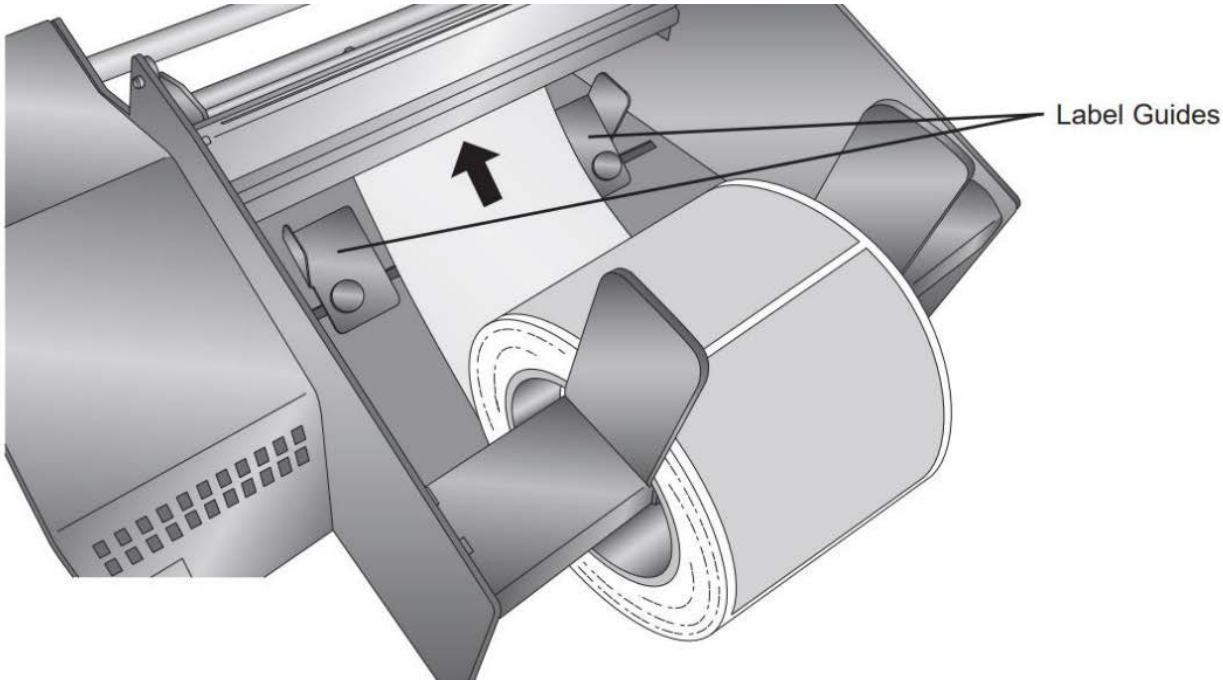

8. To make it easier to feed the label stock, first pull out the pouch idler roller until it locks into a open position. There will be approximately one inch of space between the pouch drive roller and the pouch idler roller.

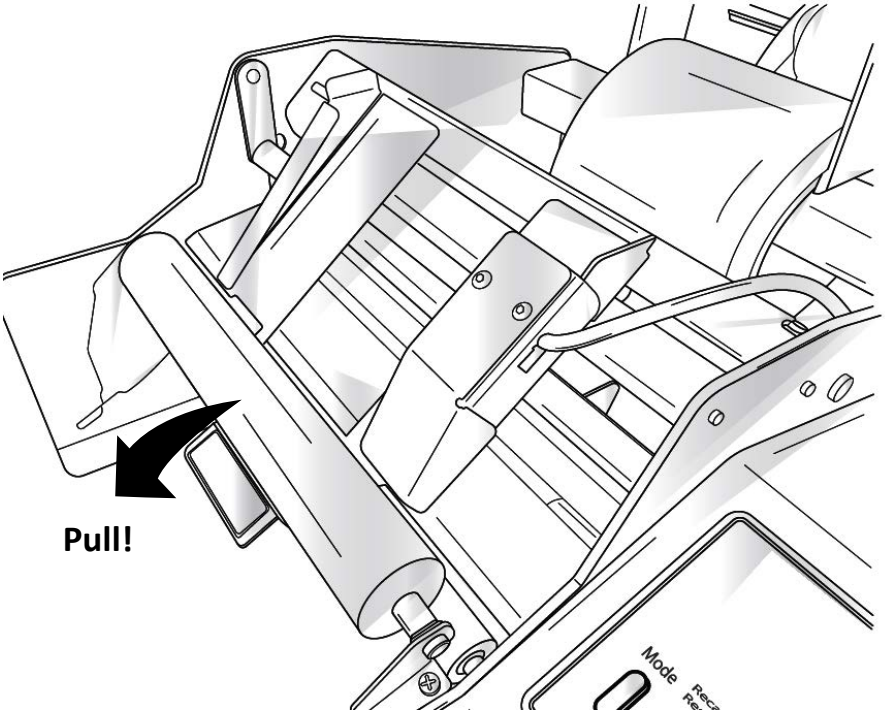

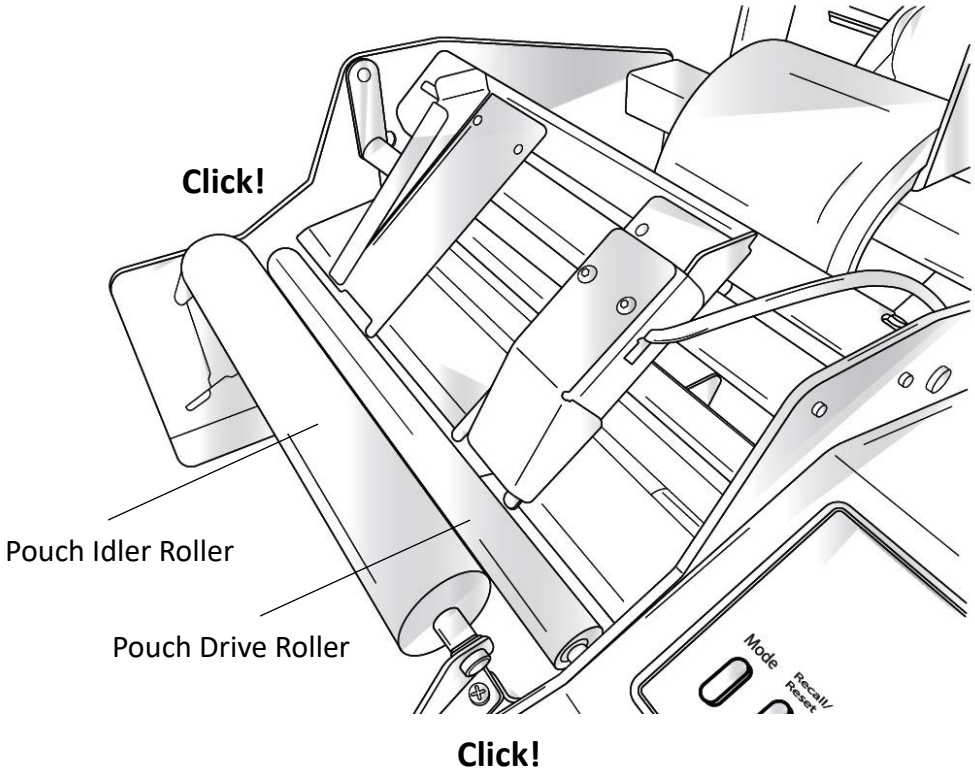

9. Flip up the pouch guides to allow easy access to the liner drive roller and liner idler roller.

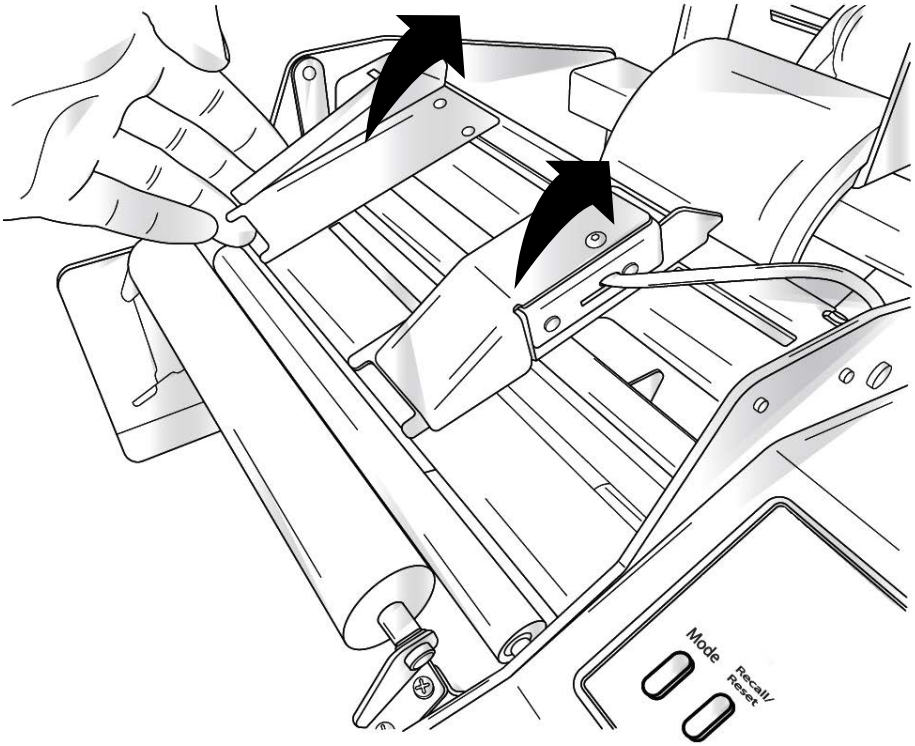

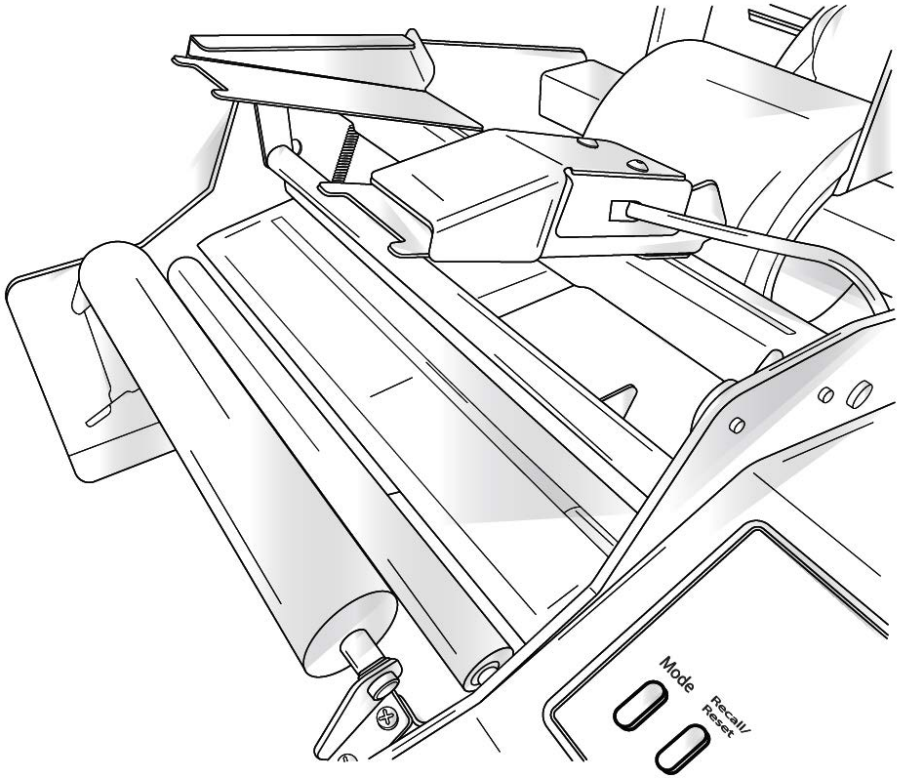

10. Pull approximately 12 inches [30 cm] of label stock out beyond the peel edge OVER the pouch idler roller. ***Remove the labels from this section of the label stock! You may still apply these labels by hand.*** You may wish to engage the label load mode discussed in Section 5D to assist with feeding label stock through the labeller for this step and the next step.

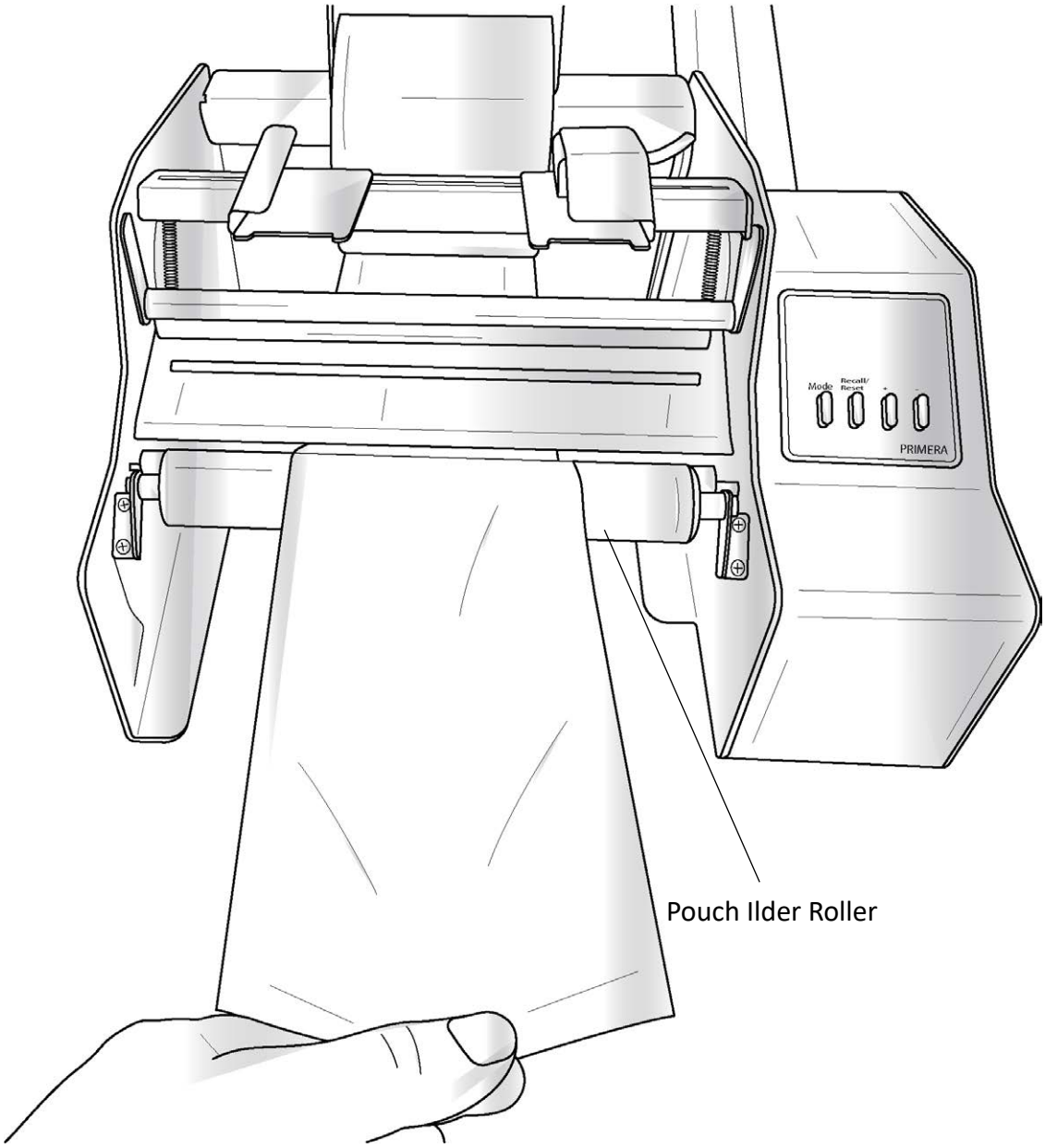

11. Take the loose label stock and feed it between the liner idler roller and the liner drive roller. In order to feed the label stock between the rollers, the liner idler roller should be in the unclamped position. You may wish to engage the label load mode discussed in Section 5D to assist with feeding label stock through the labeller.

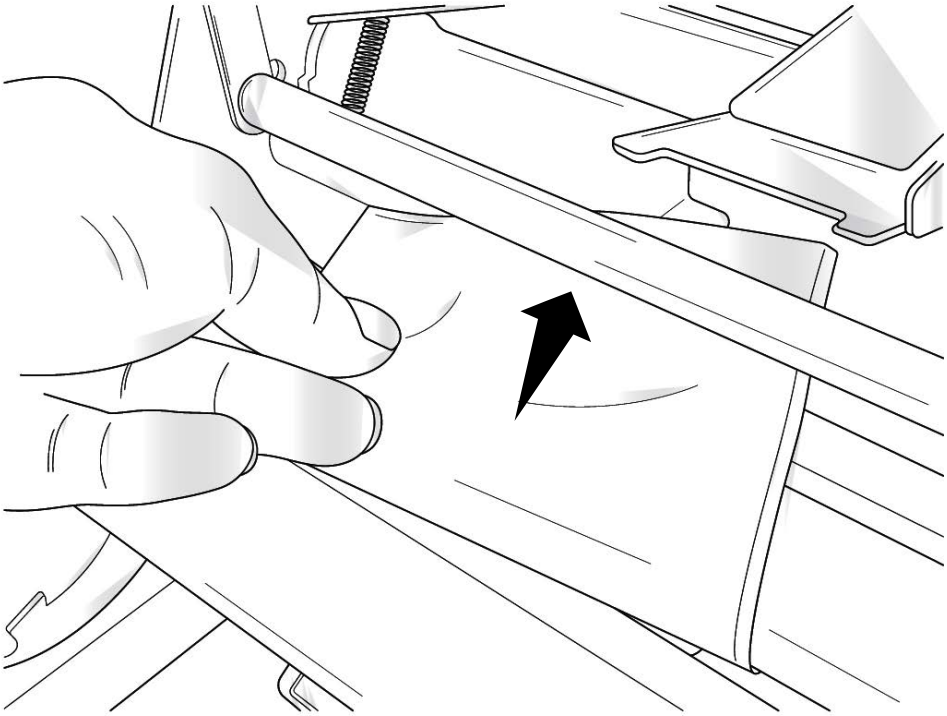

12. Pull the label stock all the way through until the end of the roll is lying over the top of the label stock roll. Adjust the label stock forward or backward so that the peel edge is between two labels.

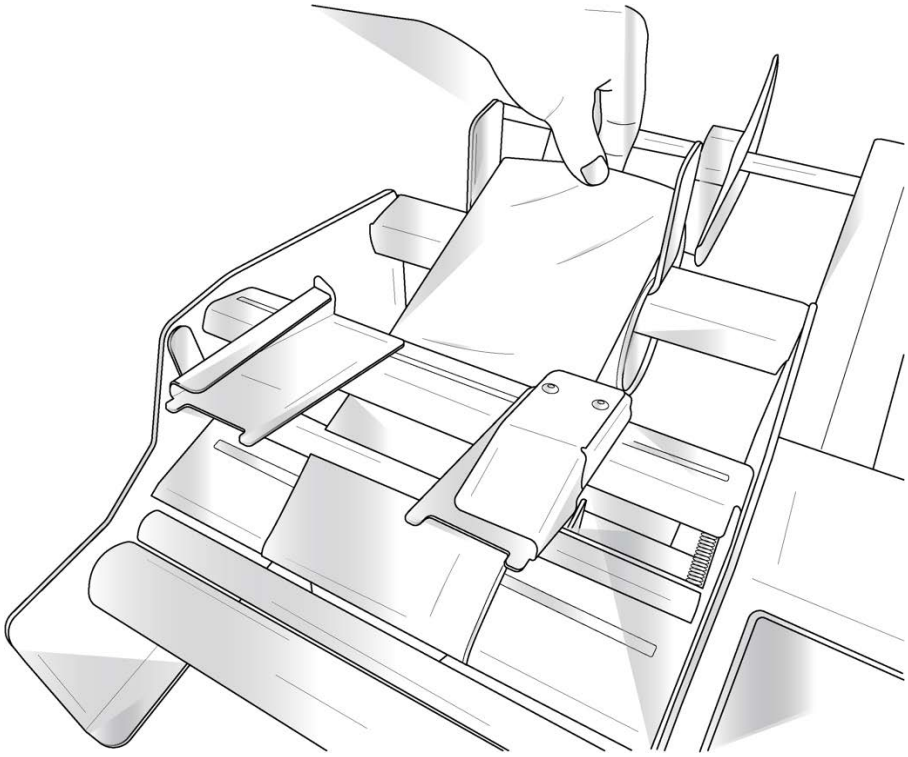

13. If necessary, adjust the position of the liner on the peel edge left/right to align the liner with the label stock roll. Also, adjust the label sensor using the label sensor bracket so that the label sensor flag is roughly centered on the label stock.

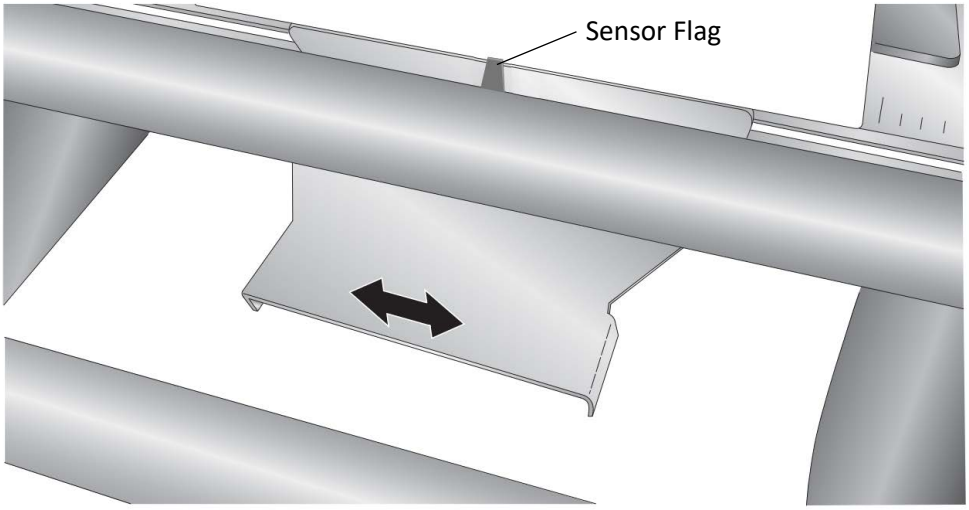

14. Push the liner idler roller into the clamped position.

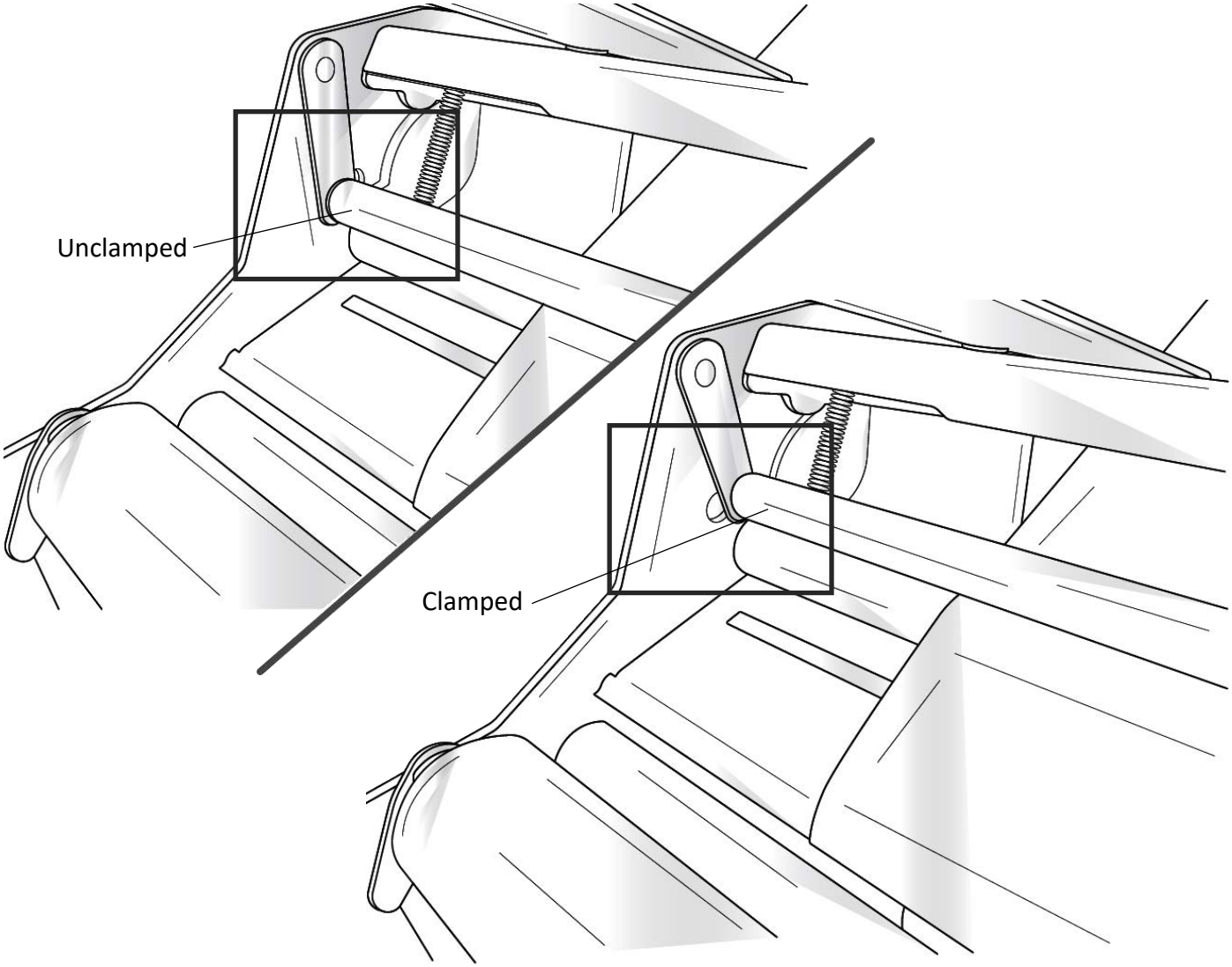

15. Lower the pouch guides.

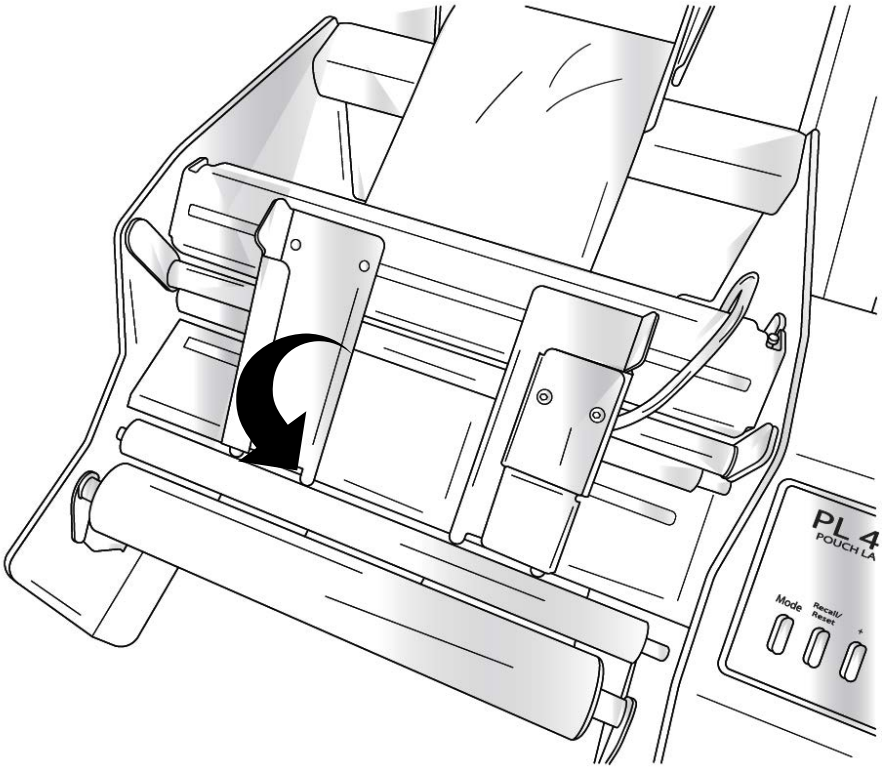

16. Push down on the release tabs on either side of the labeller simultaneously to release the pouch idler roller back to its clamped position.

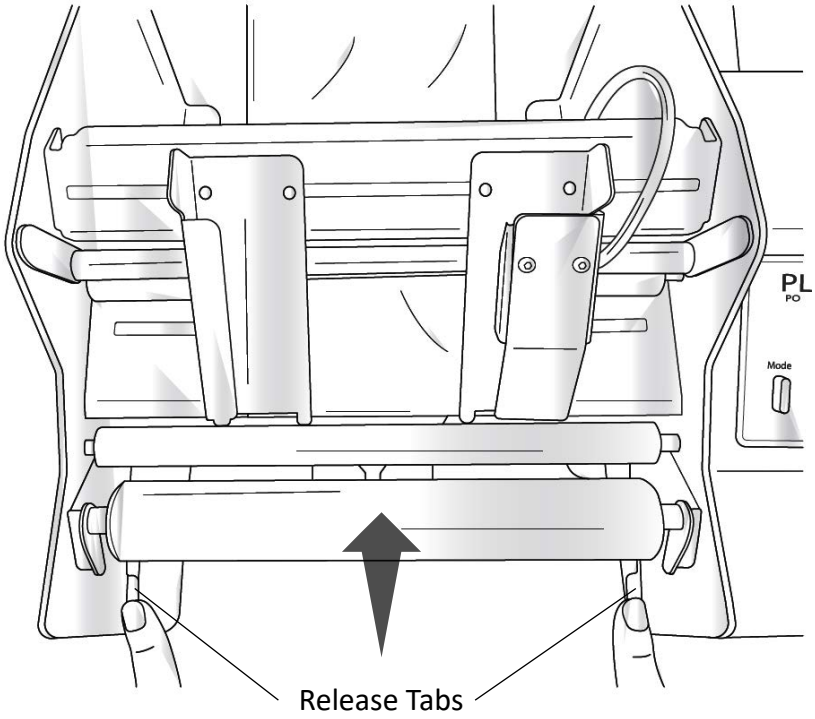

17. Adjust the label guides so that they are almost touching the edges of the label stock. Do not pinch the labels between the guides. If the guides are loose, pull them away from the label stock, and tighten the thumbscrews. When the thumbscrews are tight, move them into place on either side of the the label stock.

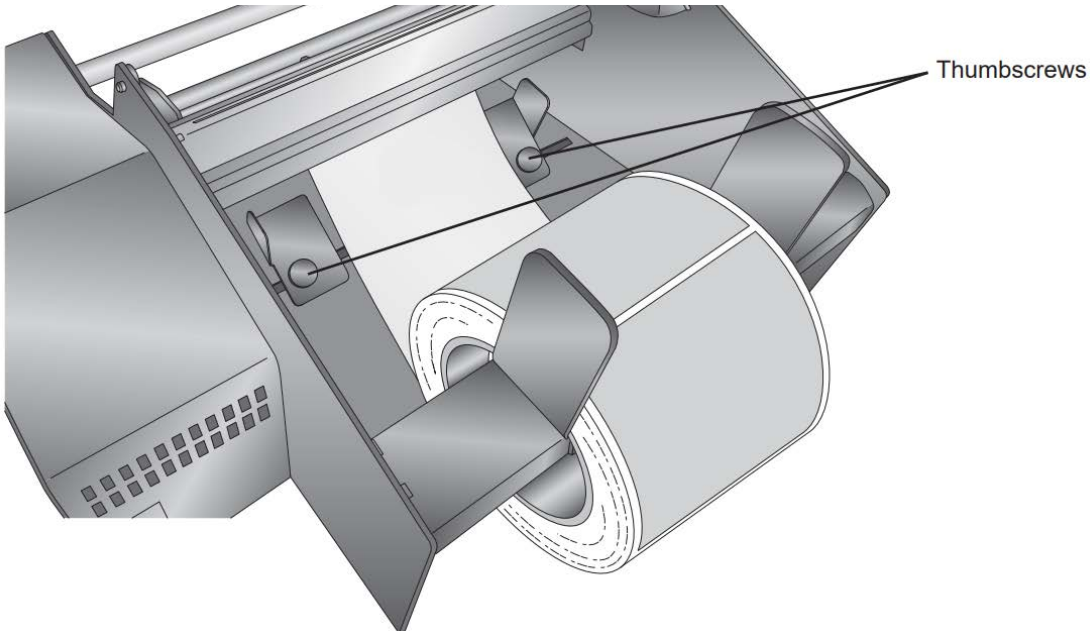

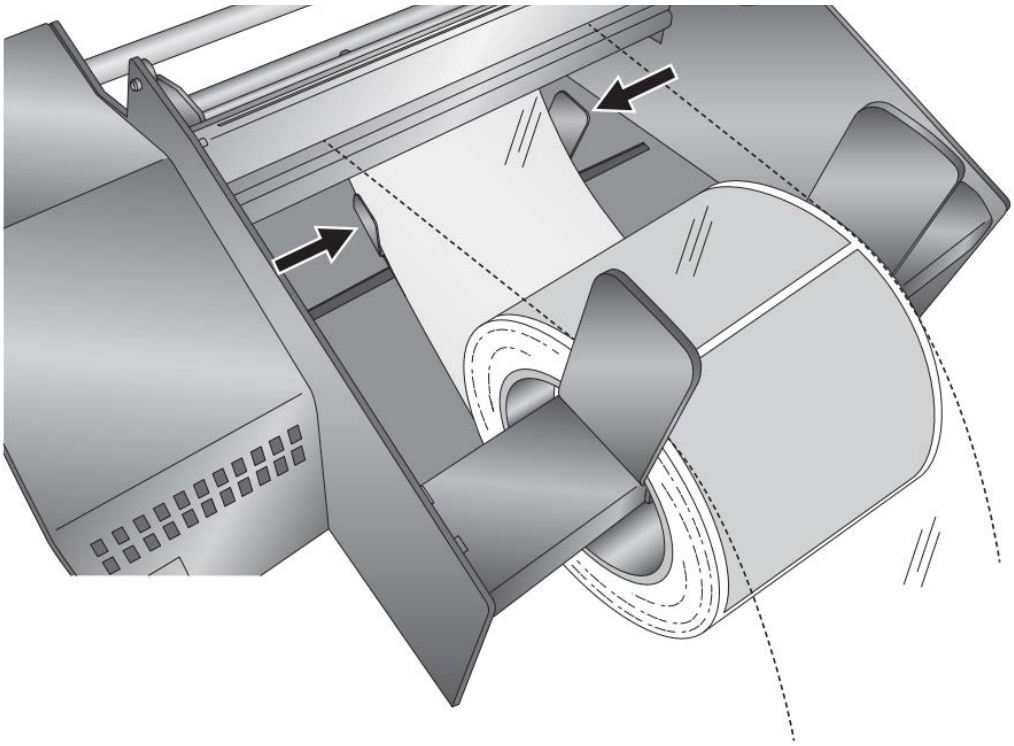

18. Begin applying labels until you have enough liner to reach the liner rewinder. Set the position of the liner guides to provide 3 mm (1/8″) space on each side of the liner.

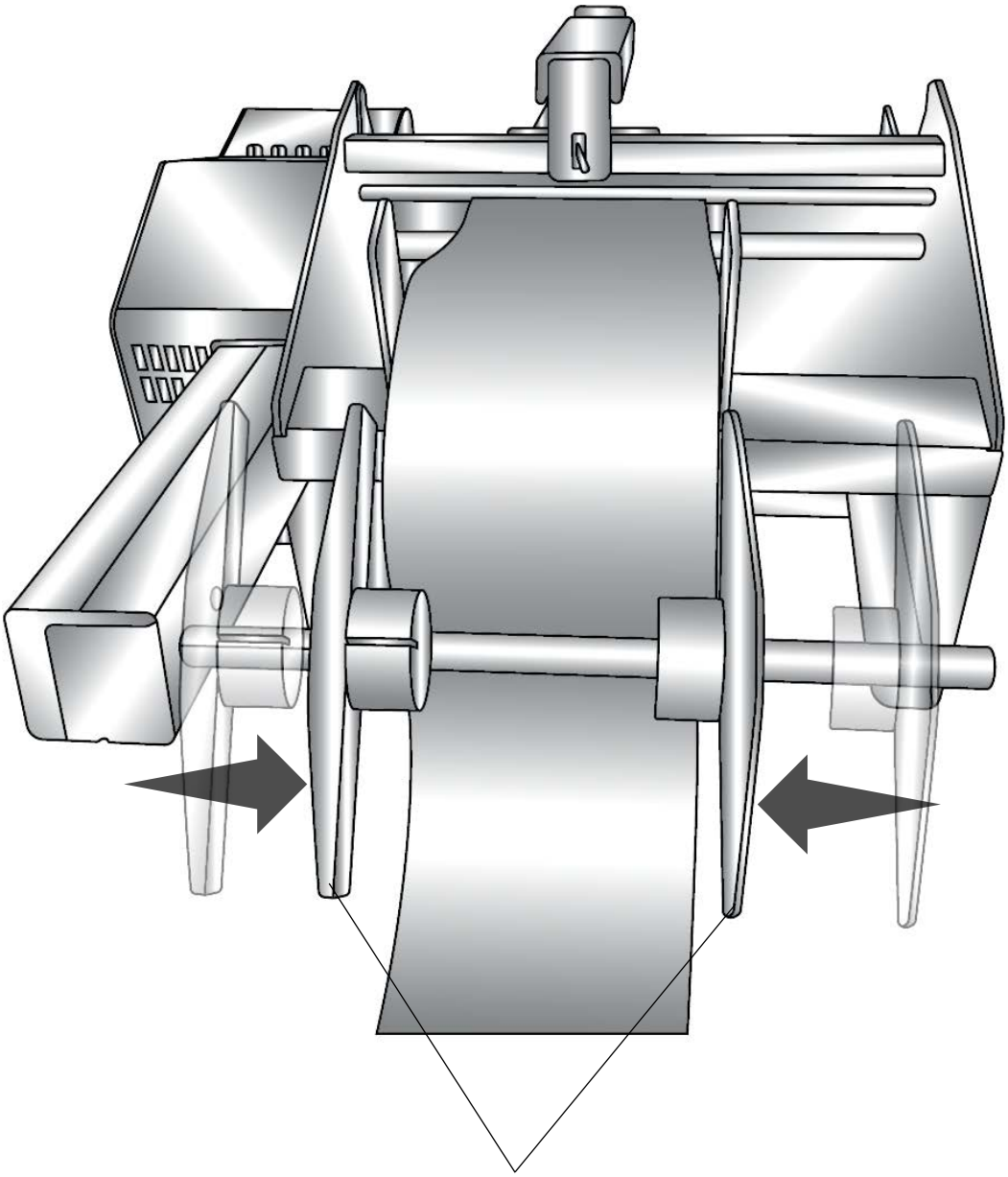

Liner Guides

19. Fold the leading edge of the liner so the folded edge is in the bottom of the slots on both liner guides. You may need to label a few pouches to have enough liner to insert into the slots. See the next section. **Tip!** We recommend trimming the liner to length with scissors to minimise the resulting slack in the liner and to provide a square leading edge to fold.

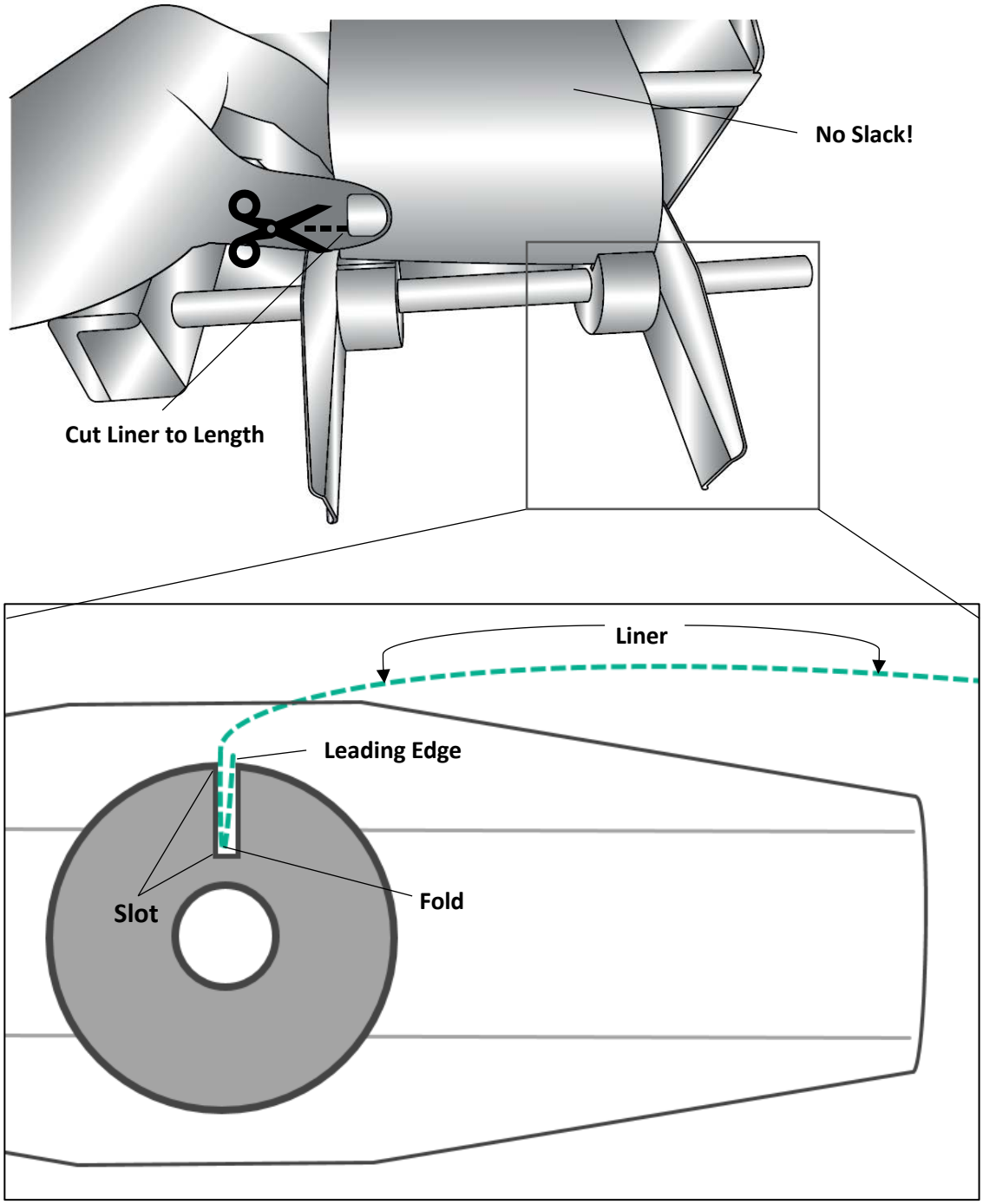

Tip! If the liner is slippery and doesn't fold well or stay in the slot, you can tape the liner to the guides to keep it in place. Use low tack tape that has a long cure period, such as blue painter's tape. You may also use the labeller without using the liner rewinder by removing the liner guides and letting the linder fall over the shaft onto the floor.

20. You may need to label a few pouches to have enough liner to wrap around the liner guide cylinders. See the next section. The tension in the liner should keep the folded liner in the slots**. Do not hand turn** the rewinder. It doesn't hurt the rewinder, it just doesn't work as well as letting the the liner tighten during normal usage.

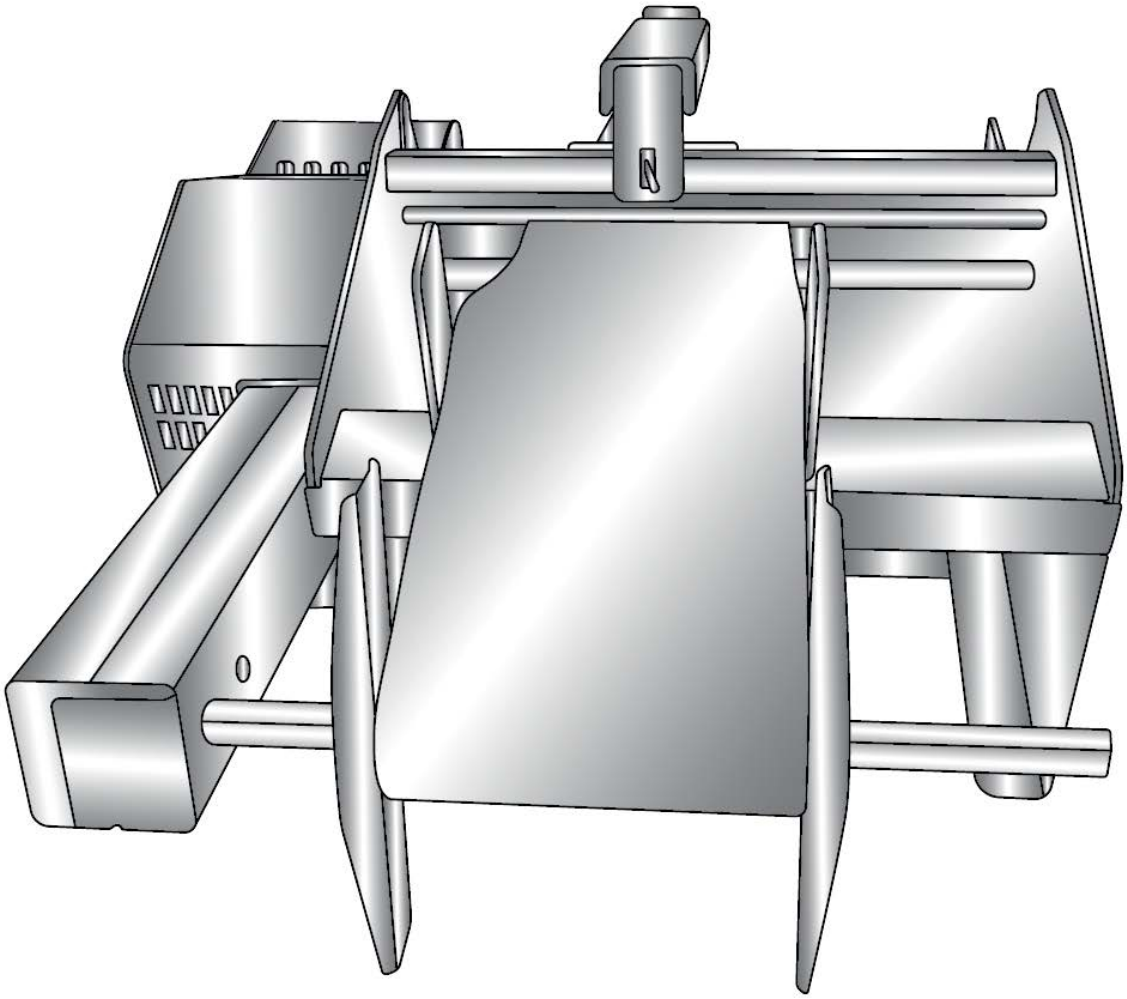

Section 4: Loading the Pouch/Applying the Label

1. Switch off the labeller using the power switch. This will allow you to setup the pouch position without accidentally triggering a label application.

2. Move the position of the pouch guides relative to the label stock. Generally, you will want to center the pouch on the labels.

3. Make sure the pouch guides are just wide enough to accommodate the pouch. If the guides are too tight, the pouch will be pinched between them, causing warping of the pouch or slipping of the pouch drive roller. The label may be wrinkled or mislocated on the pouch if a pouch is fed in this condition. If the pouch guides are too far apart, the labels will not be consistently located on the pouches and the sensor in the right pouch guide may not be triggered when a pouch is inserted.

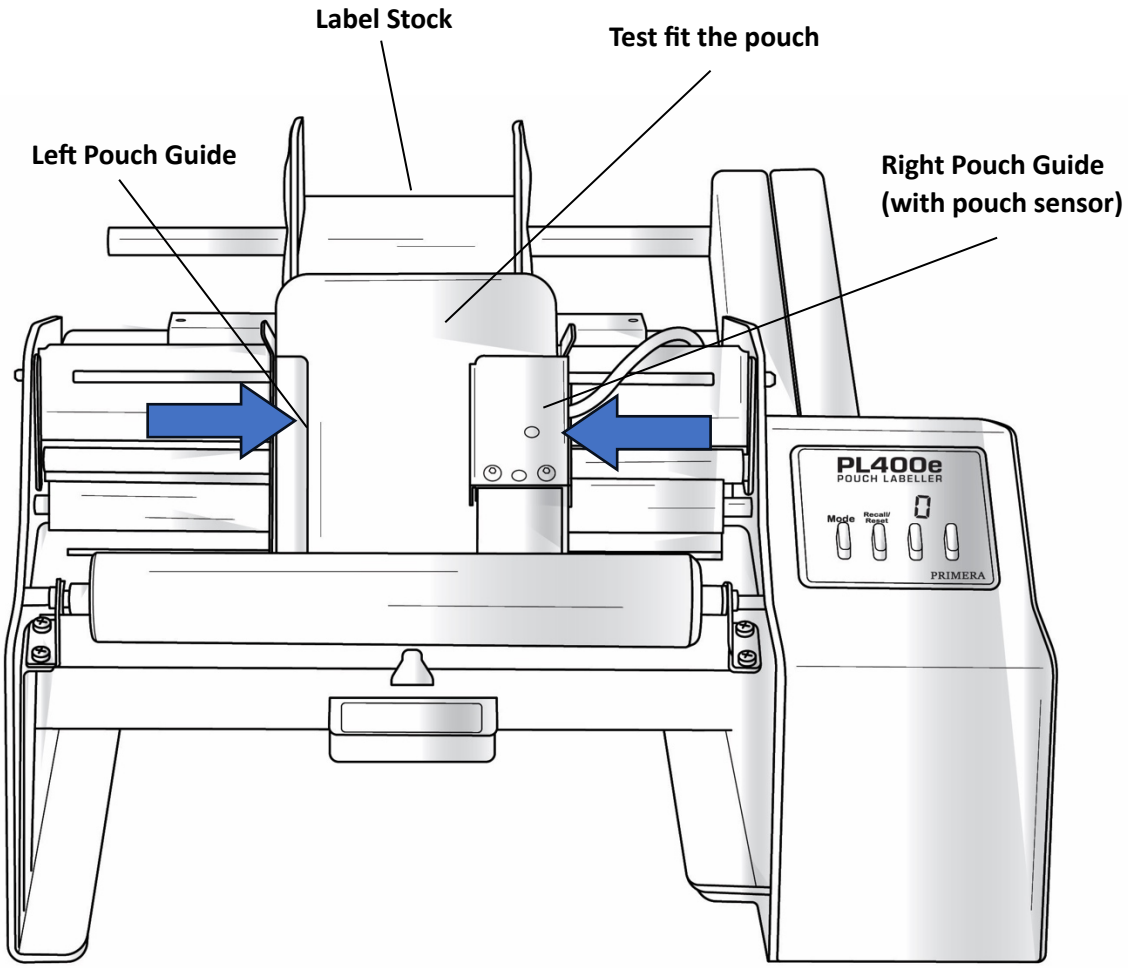

4. Test fit the pouch in between the guides. When you think the position is correct, remove the pouch.

5. Switch on the labeller.

6. Insert the pouch into the guides. The labeller will automatically grab the pouch and apply the label.

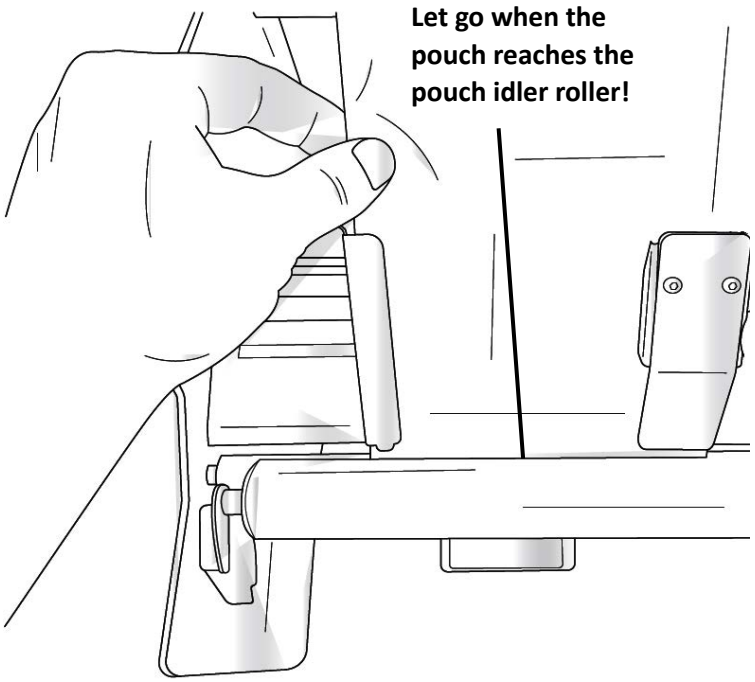

Important Note: Do not push or hold the pouch when the labeler is feeding the pouch.

7. Check the horizontal (left-to-right) position. Readjust the guides, if necessary. The peel edge has a position scale in 3 mm increments to help gauge the relative positions of labels and pouches.

8. Next, check the vertical (top-to-bottom) position of the label. By default, the label will be applied 19 mm from the leading edge of the pouch. **See the next page (Section 5A) for instructions on how to adjust the vertical position.**

9. When you are satisfied with the positon of the label simply insert the pouches as quickly as you can, making sure the previous pouch has cleared the pouch rollers before inserting the next pouch.

Section 5: Settings Overview

5A. Label Position

Vertical

Labels are positioned on pouches in the vertical direction based on the current label position setting, which represents the approximate distance from the top of the pouch (leading edge as fed into applicator) to the top of the label after application. Your labeller has nine memory locations for storing nine different label position settings. Press "Mode" button once to display current memory location (designated by *L* on display). Use the "Recall/Reset" button to select number (1-9).

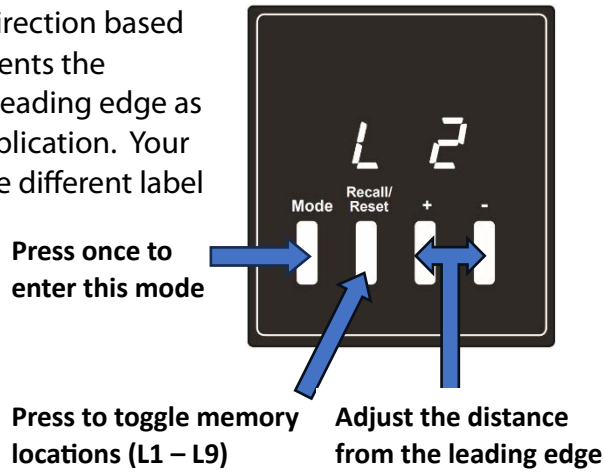

The number displayed represents a discrete memory location which will be shortly followed by a corresponding number indicating the distance between labels in inches or centimeters, depending on the current unit of measure. Use the "+ / -" buttons to adjust the distance for that memory location. After 8 seconds the unit will store the mode and setting and the display will revert back to a label counter. Please note: The label position can be set from 0.75 inches [1.9 cm] to 9.75 inches [24.8 cm].

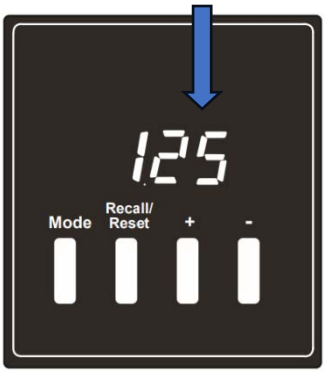

Horizontal

You can position your labels almost anywhere on your pouches. The position of the label roll… and therefore position of the label stock at the peel edge… relative to the position of the pouch guides determines the horizontal placement of the labels on your pouches. With the applicator switched off, adjust the positions of the label and pouch guides as desired being careful not to pinch the label roll with the roll guides, the label stock with the label guides, or the pouches with the pouch guides. The peel edge has a position scale in 1/8" increments to help gauge the relative positions of labels and pouches. See section 4 for more information.

5B. Application Speed

High-Speed Mode (default): 14.2 cm (5.6") / second

This mode is used for the most common Labels. Labels 6 in. [15.2 cm] or wider or labels with very aggressive adhesive may cause motor stalling. If you experience motor stalling, switch to High-Torque Mode.

High-Torque Mode: 7.6 cm (3") / second

This mode provides more motor torque to handle larger supply rolls and the most peel-resistant labels. To activate High-Torque Mode, press and hold the "Recall" and "-" buttons while switching on the your labeller. To switch back to High-Speed Mode, press and hold the "Recall" and "+" buttons while switching on your labeller.

5C. Label Counter Mode

By default, your applicator will display the number of labels applied. This value will temporarily disappear when viewing or changing modes, but the current value will be redisplayed automatically. This value is retained when the unit is switched off. To reset the counter to "0", press and hold the "Reset" button for 5 seconds. To increment or decrease the label count, press and hold either the "+" or "-" buttons for 5 seconds and then use the "+ / -" buttons to adjust the value as desired.

5D. Label Load Mode

To assist with loading your label stock, your applicator has a Label Load Mode that runs the drive rollers slowly. To engage Label Load Mode, press and release the "Mode" and "-" buttons simultaneously. Press any button to exit the Label Load Mode.

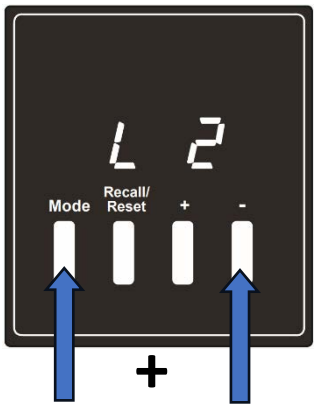

Press Together and Release

5E. Single Label Feed

To assist with setup or to skip a known bad label, a single label can be dispensed without loading a label. To avoid applying a label to the application roller, set the roller to its open position. Then press and release the "Mode" and "+" buttons simultaneously to dispense one label.

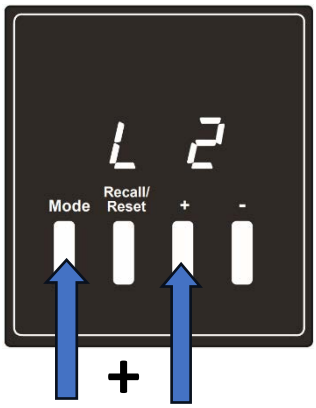

Press Together and Release

5F. Units of Measure

English (inches)

In this configuration, "-" will be the first digit of the firmware version displayed during unit start-up. To change to English from metric, press and hold "Mode" and "+" buttons simultaneous while switching your labeller.

Metric (centimeters)

In this configuration "=" will be the first digit of the firmware version displayed during unit start up. To change to metric from English, press and hold "Mode" and "-" buttons simultaneous while switching your labeller.

5G. Display Intensity

The intensity of the applicator's LED display can be easily adjusted. Press and hold the "Mode" button for 5 seconds. When LEd is displayed, use the "+ / -" buttons to adjust value as desired. The value can be adjusted from 1 to 9; 9 is the brightest.

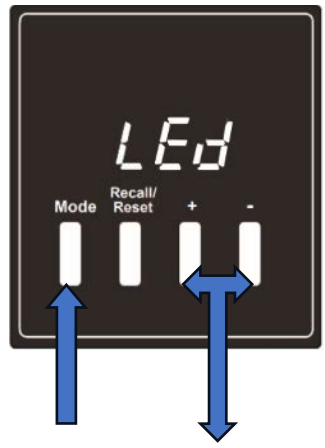

Press for 2 seconds **Adjust Intesity**

5H. Change Max Label Length

By default the maximum label length that can be applied is 406 mm (16"). This can be adjusted up to 812 mm (32") or as low as 101 mm (4"). To access the label length settings press and hold the "Mode" button for 5 seconds. When LEd is displayed press Mode two more times until LAb is displayed. Now press the +/- button to increase or decrease the max label length. To minimise the severity of label jams should they occur, the max label length should generally be set to no more than 50.8 mm (2") longer than your longest label length.

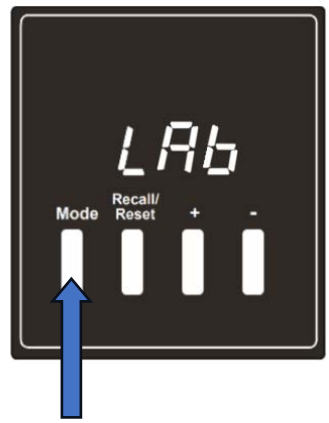

Press for 5 seconds and then press two more times until Lab is displayed

Advanced Settings (Do not adjust unless directed by Tech Support)

These settings can resolve some issues if used appropriately. However, if used in the wrong circumstances, they can cause your labeller to stop functioning normally.

5H. Label Sensor Trigger Mode (Advanced)

To check or adjust the trigger point of the label sensor, the labeller has a Label Sensor Trigger Mode. To enter this mode, press and release the "Recall" and "-" buttons simultaneously. The display will show either OFF or ON, depending on the position of the label sensor flag. The trigger point of the sensor is the sensor flag position at which the display changes from *OFF* or *ON* or vice versa.

5L. Pouch Drive Speed Factor

As a label is applied to a pouch, they must be fed at approximately the same rate. If the pouch gets ahead of the label, slack will be created in the liner. If the label gets ahead of the pouch, a bulge will be created in the label between the peel edge and the application roller. Both can cause failure. Some combinations of label stock and pouch can cause a discrepancy in feed rates that requires an adjustment. If cleaning the drive rollers and adjusting the liner idler roller pinch force doesn't solve the feed discrepancy, the feed rate of the pouch drive roller relative to the feed rate of the label drive roller can be adjusted.

To adjust the Pouch Drive Speed Factor, press and hold the "Mode" button until the display changes to LEd. Press the "Mode" button again and the display will show FAC. Press the "Recall" button and the current speed factor setting will be displayed. Press the "+" or "-" buttons to adjust. 273 is the default setting. The speed factor represents 1.XXXX of the label drive speed. Example: Setting 273 = 1.0273 times the label drive speed.

Section 6: Label Path Diagram

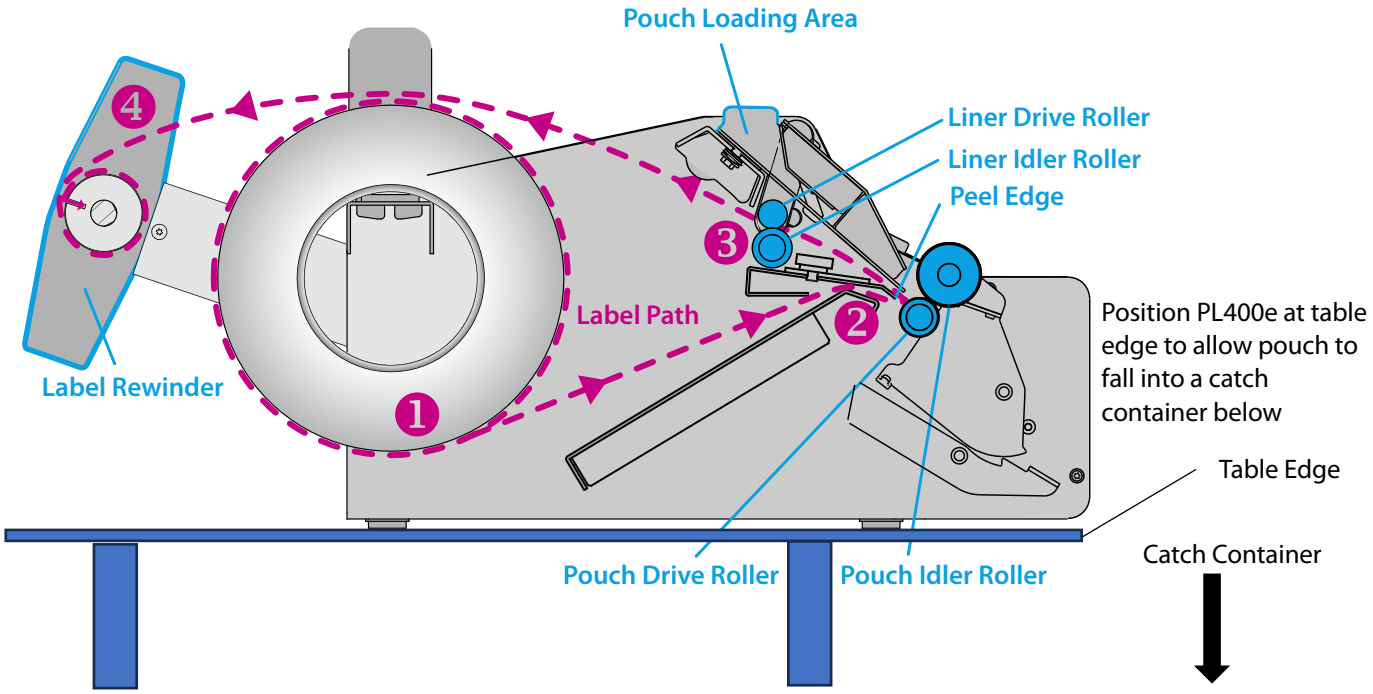

Section 7: Troubleshooting and Maintenance

7A. Troubleshooting

Motor stalling on Labels 152.4 mm (6”) or wider.

For label stock 142.4 mm (6”) and wider, it may be necessary to reduce the speed of the labeller. The labeller includes a high-torque mode that generates more torque from the motors for wider label stock. To activate High-Torque Mode, press and hold the “Recal” and “-” buttons while switching on the unit. To switch back to High-Speed Mode, press and hold the “Recall” and “+” buttons while switching on the unit.

The labeller is running slow.

See Section 5B. The labeller is probably in high-torque mode which runs slower.

How should label stock rolls be wound to work with the PL400e?

Copy Position Options, Labels Wound

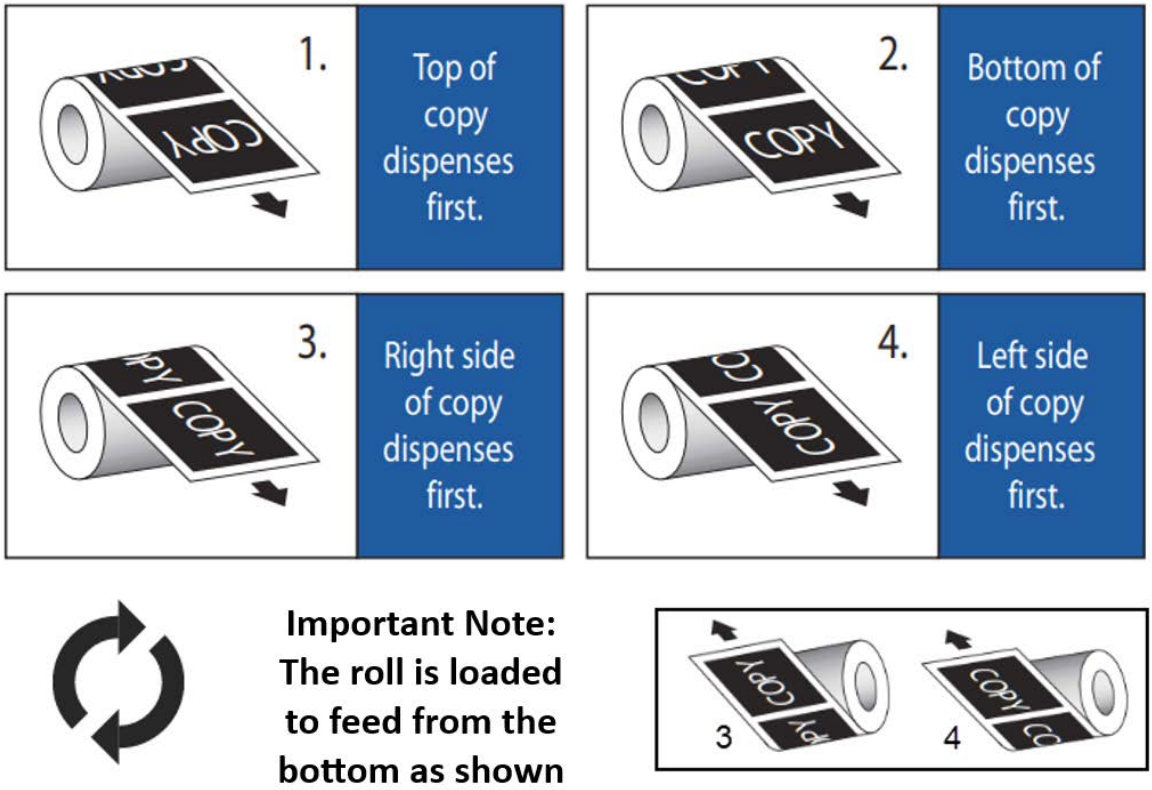

7B. Maintenance

Unclamp Liner Idler Roller

When not in use, leave the liner idler roller in the unclamped position. This will minimize the possibility that permanent indentations will be made in the liner drive roller.

Lubricate Bearings

Primera recommends oiling the four bearings associated with the liner drive roller and liner idler roller. Oil these four bearings after every 50,000 pouches labeled. They should only be oiled after the first 50,000 labels as they are lubricated with a special grease at the factory. One drop of any machine oil or motor oil for each bearing should be adequate. This maintenance is optional but will increase the life of the labeller for heavy users who apply hundreds of labels daily.

Increase Label Idler Roller Clamp Force [Knowledgebase Article/Video]

Over time, as the liner drive roller and its bearings wear, the clamp force of the liner idler roller against the liner drive roller will decrease, and the roller may begin slipping on the liner. To compensate for this decrease in pressure, you can adjust the clamp force by moving the force adjustments screws on either side of the labeller to lower positions. To make this adjustment, use a #2 Phillips screwdriver. For each screw, rotate it counterclockwise one-half turn, slide it down in the slot, then re-tighten it. Both screws should be kept in the same relative position in their slot. If the screws are moved too far down in their slot, it will be difficult to clamp the liner idler roller. You may need to make this adjustment several times throughout the life of the Labeler. If you reach the bottom of the slot the liner drive roller and bearings will need to be replaced.

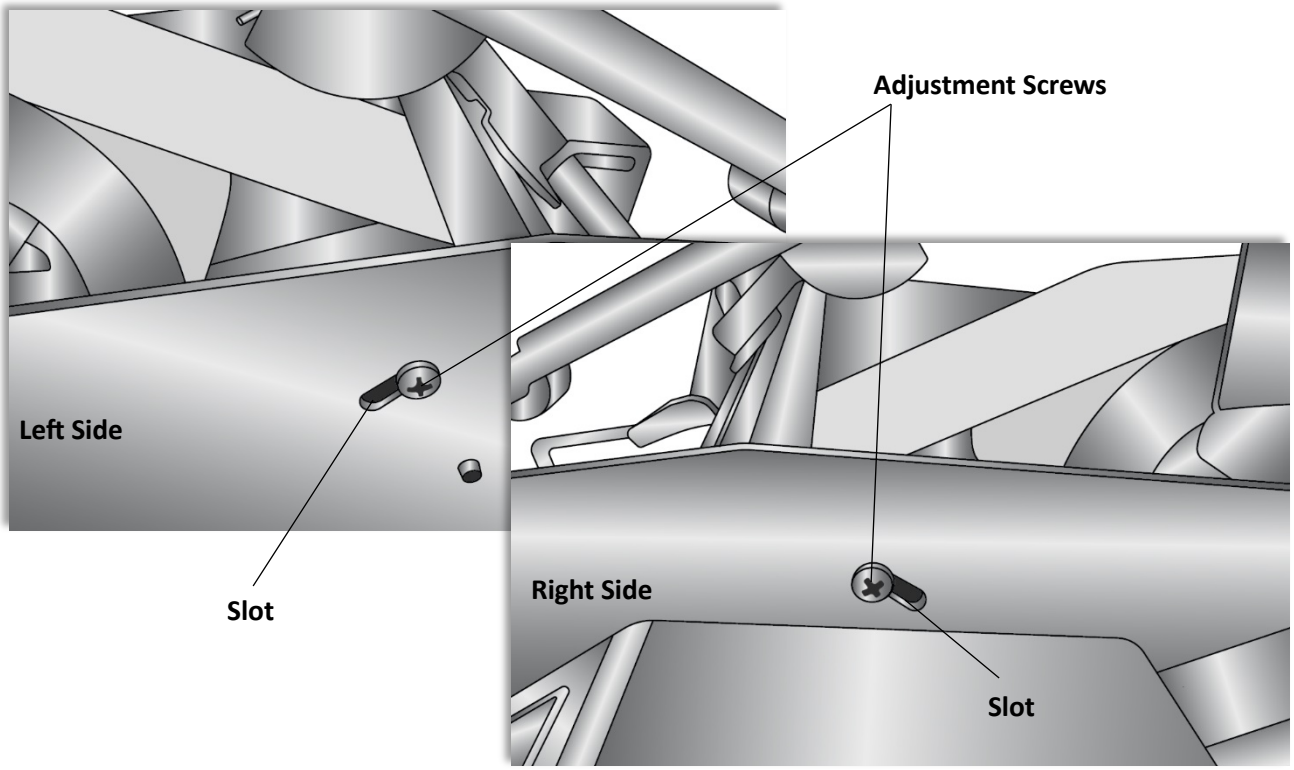

Clean Label Gap Sensor Flag [KnowledgeBase Article]

Over time, adhesive from the labels can build up on the sensor flag just above the container rollers. Periodically clean the top of the sensor flag with a cotton swab and alcohol.

Adjusting Rewinder Torque

If you find that the rewinder is pulling the liner out of the guide slots, reduce the torque by turning the shaft counterclockwise. If you find that the liner wrap on the guide rollers is too loose, increase the torque by turning the shaft clockwise. Adjust the torque in small increments of a quarter turn at a time by holding the wrench in place on the torque adjustment nut and turning the rewinder shaft.

Warning: Do not tighten the nut to its stop in either direction.

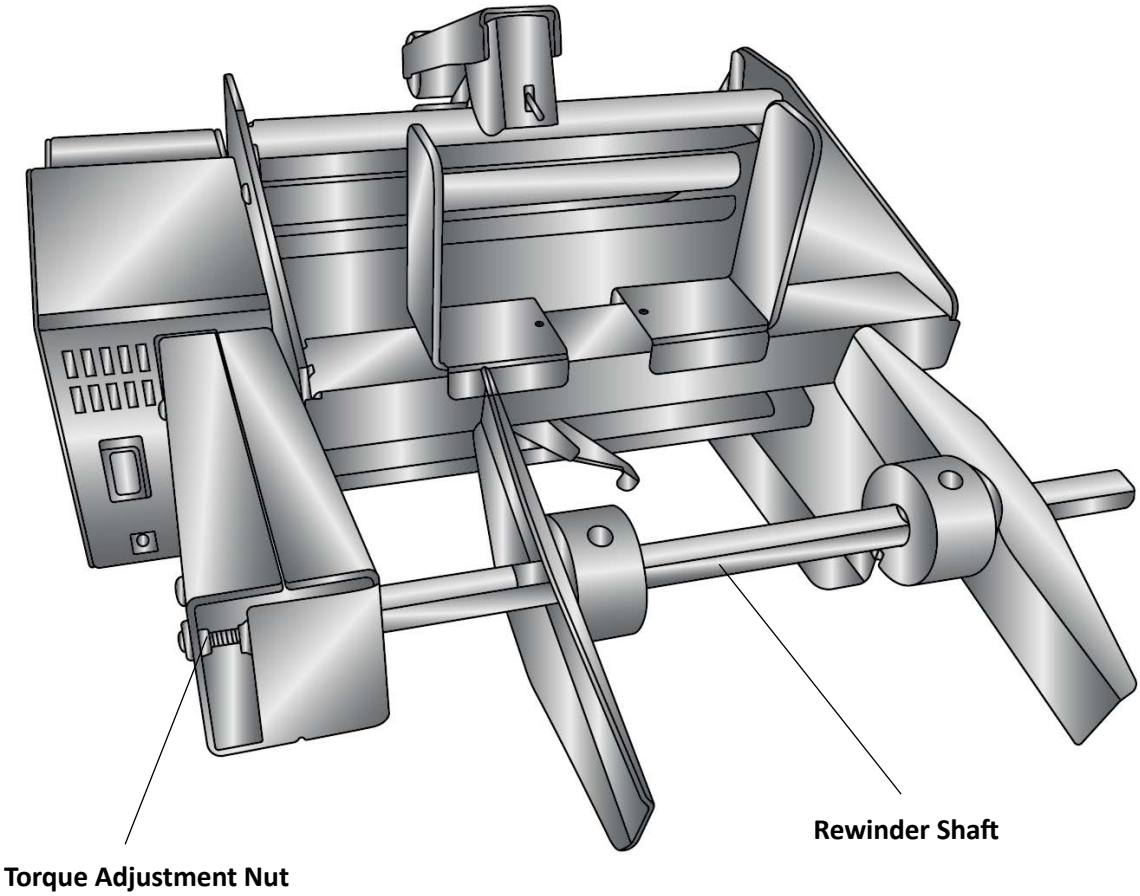

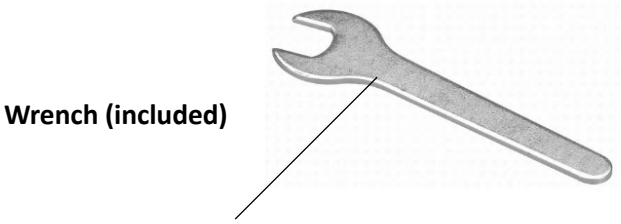

Section 8: Specifications

Pouch width:	81.28 – 228.6 mm (3.2" to 9")
Pouch Height:	44.45 – 812.8 mm (1.75" to 32")
Pouch Thickness:	Up to 5.34 mm (0.21")
Supply roll diameter:	Up to 203.2 mm (8")
Media liner width:	25.4 – 212.73 mm (1" to 8.375")
Supply roll core I.D:	50.8 – 76.2 mm (2" to 3")
Electrical rating:	12 VDC, 5 A
Power requirements:	100-240 VAC, 50/60 Hz, 60 watts
Feed speed:	14.2 cm/sec (5.6 in/sec) in high-speed mode
	7.6 cm/sec (3 in/sec) in High Torque Mode
	for 15.25 – 20.32 cm wide labels
Label width:	19 – 209.5 mm (0.75" to 8.25")
Label height/length:	19 – 812 mm (0.75" to 32.00")
Liner thickness:	50.8 – 254 µm*
Agency certifications:	UL, UL-C, CE, FCC Class B
Weight:	8.39 kg (18.5 lbs)
Dimensions:	340 x 185.4 x 508 mm (WxHxD)

***Important Note:** A liner that is too slippery or too thin will slip on the drive roller. Clear liners are usually the most problematic. We recommend a semi-bleached super-calendered kraft liners with the following specs:

Basis Weight	**48# per ream ± 10% (500 24" x 36" sheets)**
Caliper:	0.071 mm
Tensile:	MD: 42# per 2.54 cm inch width, CD: 16# per 2.54 cm width

****Important Note:** Pliability/flexibility/rigidity of the label is also a factor. If the label is too flexible, no matter the thickness, it can get caught on the sensor flag. Polypropylene, polyester and vinyl labels tend to be more flexible. It is HIGHLY recommended that the stock and container be tested on the labeller before making any label stock purchase decisions.

Section 9: Certifications and Environmental Policy

EMC: Class B

Human operator intervention is acceptable for this product in an ESD event. This means it is possible that static electricity may be discharged when touching the screen, which may restart the tablet.

FCC:

NOTE: This equipment has been tested and found to comply with the limits for a Class B digital device, pursuant to part 15 of the FCC Rules. These limits are designed to provide reasonable protection against harmful interference when the equipment is operated in a commercial environment. This equipment generates, uses, and can radiate radio frequency energy and, if not installed and used in accordance with the instruction manual, may cause harmful interference to radio communications. Operation of this equipment in a residential area is likely to cause harmful interference, in which case the user will be required to correct the interference at his own expense.

Environmental Policy

The European Union (EU) has developed the WEEE (Waste Electrical and Electronic Equipment) Directive (WEEE Directive 2012/19/EU) to ensure that systems for collection, treatment, and recycling of electronic waste will be in place throughout the European Union.

Electrical and electronic equipment (EEE) contains materials, components, and substances that may be hazardous and present a risk to human health and the environment when waste and electronic equipment (WEEE) is not handled correctly.

Equipment marked with the below crossed-out wheeled bin is Electrical and electronic equipment (EEE).

The crossed-out wheeled bin symbol indicates that the product is EEE and must be collected separately, in accordance with the WEEE Directive 2012/19/EU.

Users of EEE must not discard WEEE together with household waste. Users must follow local recycling regulations to reduce adverse environmental impacts in connection with disposal of WEEE and to increase opportunities for reuse, recycling, and recovery of WEEE. As a user of this EEE, you have an important role in recycling this equipment and contributing to the protection of the environment and the conserving of natural resources.

When a product reached its end of life, contact us at sales@dtm-print.eu to arrange its recycling. DTM will work with you to arrange for the recycling of the product.